VICOR CONFIDENTIAL
THIS DOCUMENT AND THE DATA DISCLOSED HEREIN OR HEREWITH IS NOT TO BE REPRODUCED, USED OR DISCLOSED IN WHOLE OR IN PART TO ANYONE WITHOUT THE PERMISSION OF VICOR CORP.

REV.	DESCRIPTION	INTL	DATE	APVD
01	RELEASED PER E980365	DPK	9/14/98	RCM
02	RVSD- E980451	RCM	12/1/98	DPK
03	REVSD PER E990386	AK	9/14/99	RCM
04	REVSD PER E990450	RCM	3/6/00	DPK
5	REVISED PER E0430458	PEI	09/30/04	CF
6	REVISED PER ECO REQUEST E064403	REJH	08/04/06	SH
07	REVISED PER ECN-CD021225	SDM	02/24/25	REW

VICOR HUB PART NO.	MATING CONNECTOR		
	ORDER FROM: AMP		ORDER FROM: VICOR
	HOUSING (QTY 1)	SOCKETS (QTY 3)	HOUSING/SKT KIT (QTY 1)
HUB2200-S	770018-1	193842-1	21394

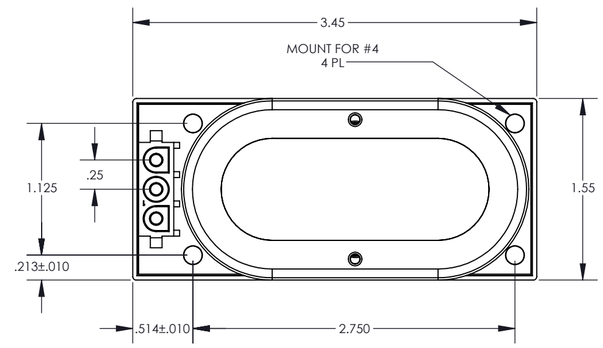

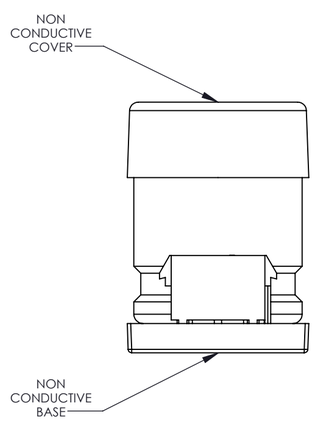

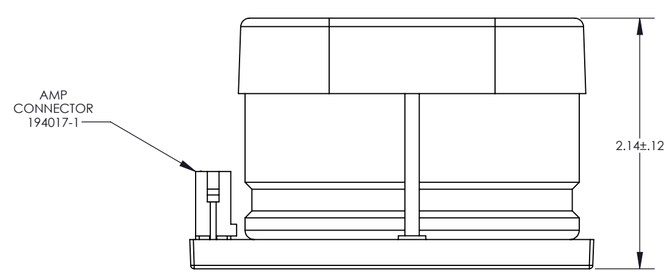

AT +105 °C, 120HZ UNLESS OTHERWISE NOTED	
ITEM	CHARACTERISTICS
OPERATING TEMPERATURE	-40 TO +105 °C
CAPACITANCE TOLERANCE @+20 °C	±20%
DISSIPATION FACTOR @ +20 °C	0.1
RATED VOLTAGE (WVDC)	200
CAPACITANCE VALUE (C1, C2 EA. uF)	2200
MAXIMUM ESR (OHMS) @ +20 °C	.113
MAXIMUM RIPPLE CURRENT (A rms)	3.62

Note: RoHS compliant, lead free per CST-0001 latest revision.

DRAWN BY	DATE
C HUTCHINS	7/97

UNLESS OTHERWISE SPECIFIED DIMENSIONS ARE IN INCHES-
TOLERANCES ARE:
DECIMALS X.XX [X.XX] = ±0.01 [0.25] X.XXX [X.XXX] = ±0.005 [0.127]
ANGLES ±1°

THIRD ANGLE PROJECTION

DO NOT SCALE DRAWING

VICOR SWD

OUTLINE DRAWING, HUB2200-S

SIZE	CAGE CODE	DWG NO	REV
C	67131	16767	07

SCALE 1:1 SHEET 1 OF 1