VICOR CONFIDENTIAL

THIS DOCUMENT AND THE DATA DISCLOSED HEREIN OR HEREWITH IS NOT TO BE REPRODUCED, USED OR DISCLOSED IN WHOLE OR IN PART TO ANYONE WITHOUT THE PERMISSION OF VICOR CORP.

REV.	DESCRIPTION		DATE	APPROVED
2	REVISED PER E080070	SA	01/15/08	REJH
3	REVISED PER E091753	JS	09/29/09	REJH
4	REVISED PER E092276	JS	12/30/09	REJH
5	REVISED PER E120065	VSS	01/20/12	KUK

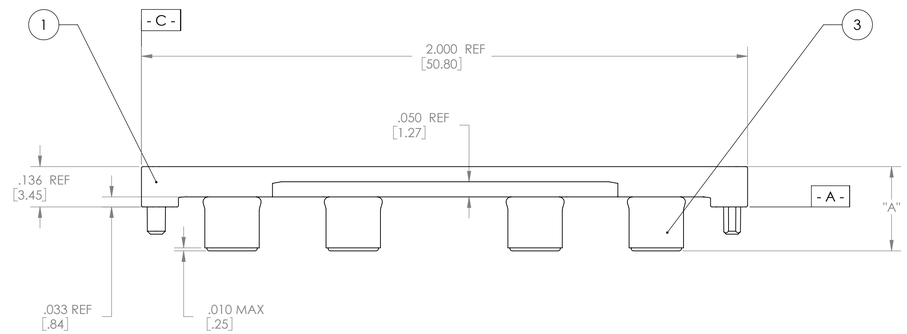

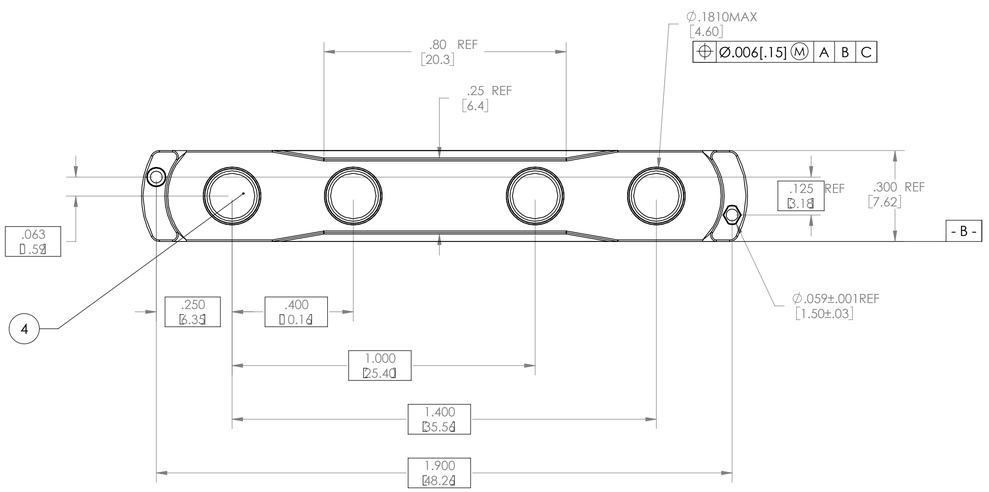

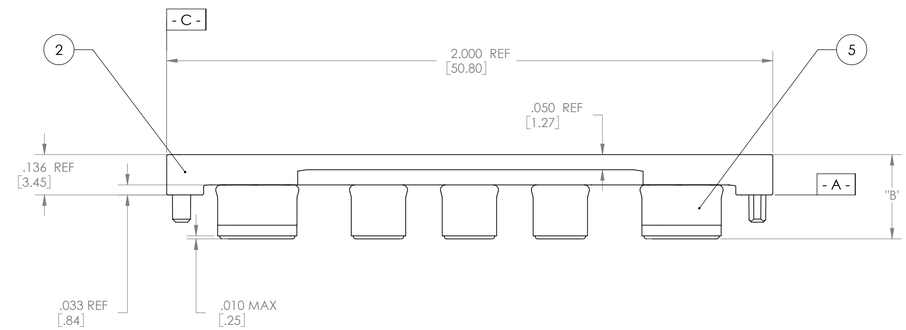

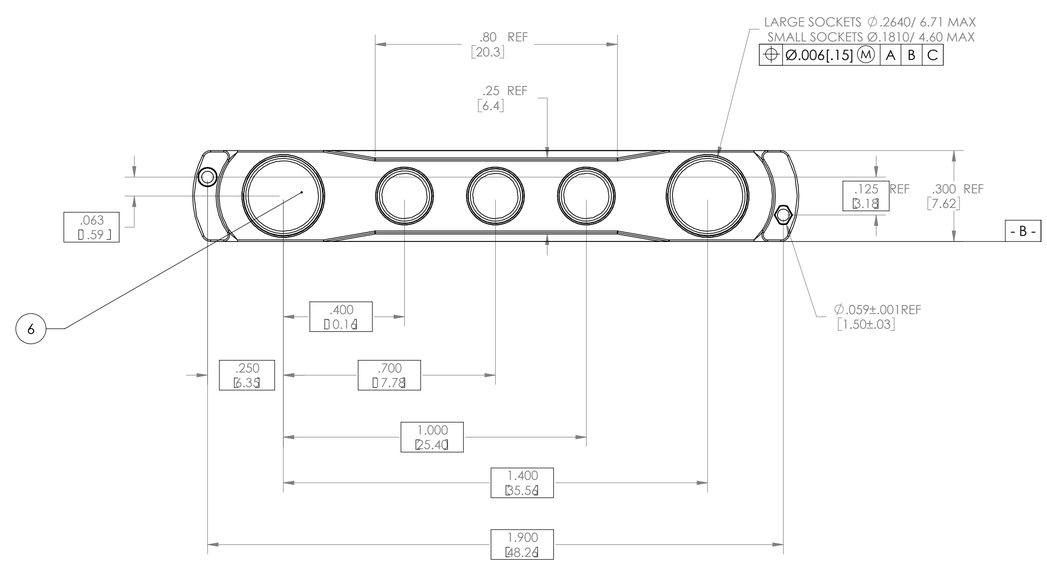

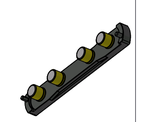

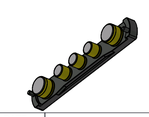

DASH NO.	SOCKET BODY LENGTH INCH/MM	DIM "A" INCH/MM	DIM "B' INCH/MM	INPUT	OUTPUT	KIT #
-01	.100/2.54	.243/6.17	.243/6.17	18374	18382	18362
-02	.135/3.43	.278/7.06	.278/7.06	18375	18383	18363

NOTE:
1. MATERIALS: INMATES: PPS RYTON 7
   SOCKETS: BE-CU #25, Au PLATED.
2. FULLY SEAT SOCKET INTO INMATE HEADER.
3. ROHS COMPLIANT PER CST-0001 LATEST REVISION.

DRAWN BY	DATE
LAP NGUYEN	6/99

UNLESS OTHERWISE SPECIFIED DIMENSIONS ARE : INCH / [MM]
TOLERANCES ARE:
DECIMALS: X.XX [X.X] = ±0.01 [0.25]
X.XXX [X.XX] = ±0.005 [0.127]
ANGLES: ±1°

THIRD ANGLE PROJECTION

DO NOT SCALE DRAWING

VICOR SWD

DWG,VI-900 INMATE/SOCKET,BIB

SIZE	CAGE CODE	DWG NO	REV
D	67131	18483-XX	5

SCALE 4:1 SHEET 1 OF 1