VICOR CONFIDENTIAL

THIS DOCUMENT AND THE DATA DISCLOSED HEREIN OR HEREWITH IS NOT TO BE REPRODUCED, USED OR DISCLOSED IN WHOLE OR IN PART TO ANYONE WITHOUT THE PERMISSION OF VICOR CORP.

| REV. | DESCRIPTION | | DATE | APPROVED |
|---|---|---|---|---|
| 1 | RELEASED PER E0230307 | PEI | 07/11/02 | JMR |
| 2 | REVISED PER E080070 | SA | 01/15/08 | REJH |
| 3 | REVISED PER E091753 | JS | 09/29/09 | REJH |
| 4 | REVISED PER E092276 | JS | 12/30/09 | REJH |
| 5 | REVISED PER E120065 | VSS | 01/20/12 | KUK |

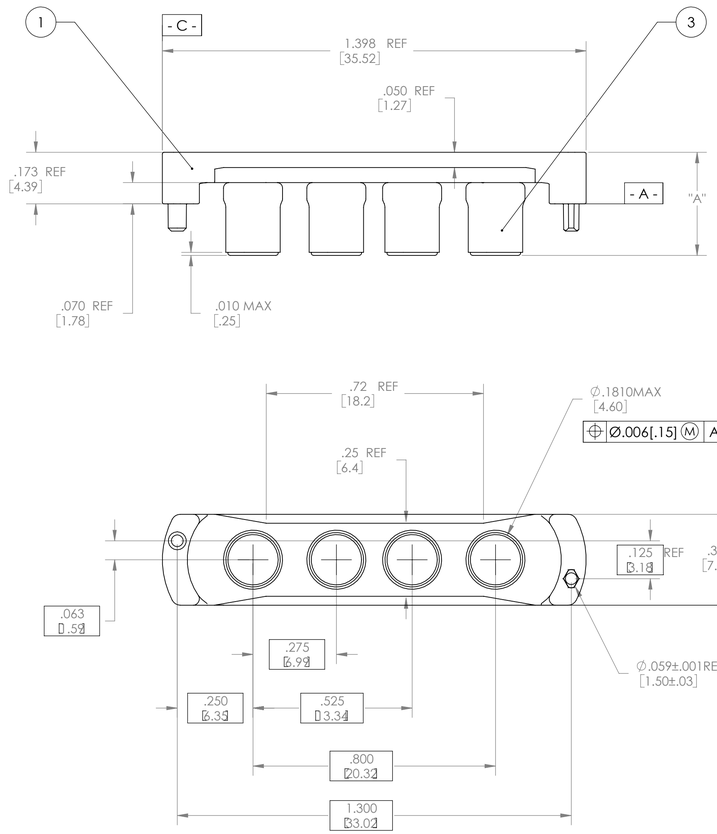


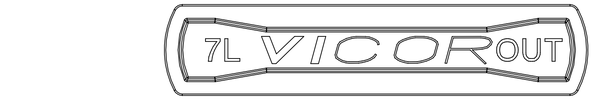


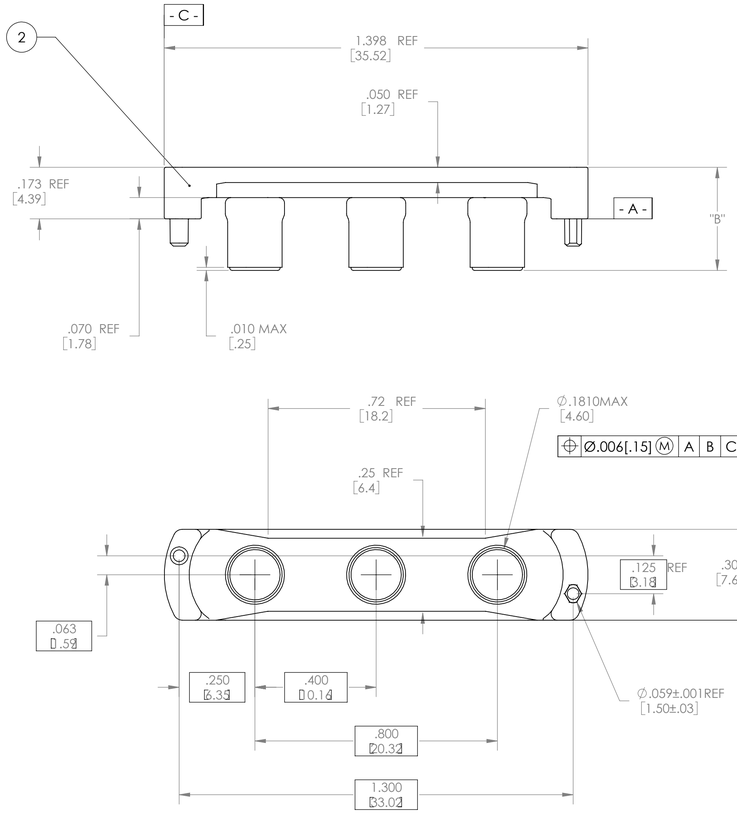


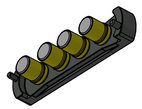

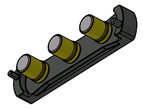

| DASH NO. | SOCKET BODY LENGTH INCH/MM | DIA "A" INCH/MM | DIA "B" INCH/MM | INPUT | OUTPUT | KIT # |
|---|---|---|---|---|---|---|
| -01 | .100/2.54 | .280/7.11 | .280/7.11 | 18380 | 18392 | 18372 |
| -02 | .135/3.43 | .315/8.00 | .315/8.00 | 18381 | 18393 | 18373 |
| -03 | .160/4.06 | .340/8.64 | .340/8.64 | 21540 | 21545 | 21512 |

NOTE:
1. MATERIALS: INMATES: PPS RYTON 7
   SOCKETS: BE-CU #25, Au PLATED.
2. FULLY SEAT SOCKET INTO INMATE HEADER.
3. ROHS COMPLIANT PER CST-0001 LATEST REVISION.

| DRAWN BY | DATE |
|---|---|
| LAP NGUYEN | 6/99 |

UNLESS OTHERWISE SPECIFIED DIMENSIONS ARE : INCH / [MM]
TOLERANCES ARE:
DECIMALS ANGLES
X.XX [X.X] = ±0.01 [0.25] ±1°
X.XXX [X.XX] = ±0.005 [0.127]

THIRD ANGLE PROJECTION

DO NOT SCALE DRAWING

VICOR SWD

**DWG,VI700 INMATE,LN**

| SIZE | CAGE CODE | DWG NO | REV |
|---|---|---|---|
| D | 67131 | 20029-XX | 5 |

SCALE 4:1 SHEET 1 OF 1