VICOR CONFIDENTIAL
THIS DOCUMENT AND THE DATA DISCLOSED HEREIN OR HEREWITH IS NOT TO BE REPRODUCED, USED OR DISCLOSED IN WHOLE OR IN PART TO ANYONE WITHOUT THE PERMISSION OF VICOR CORP.

REV.	DESCRIPTION	INTL	DATE	APVD
1	RELEASED PER E050349	PEI	11/15/05	ECF
2	REVISED PER E100841	KUK	06/22/10	GCK
3	REVISED PER E140550a	GCK	05/01/14	TO

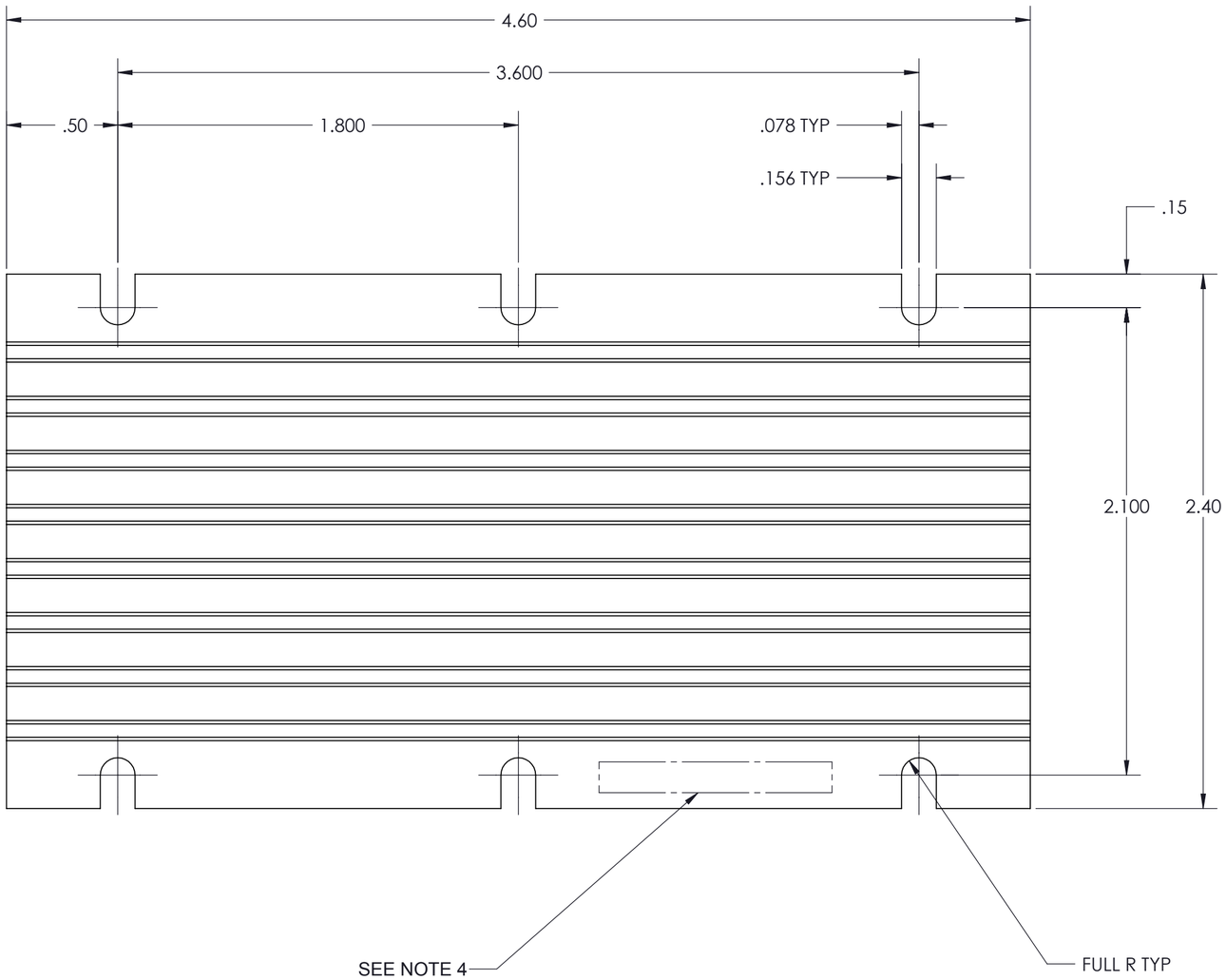

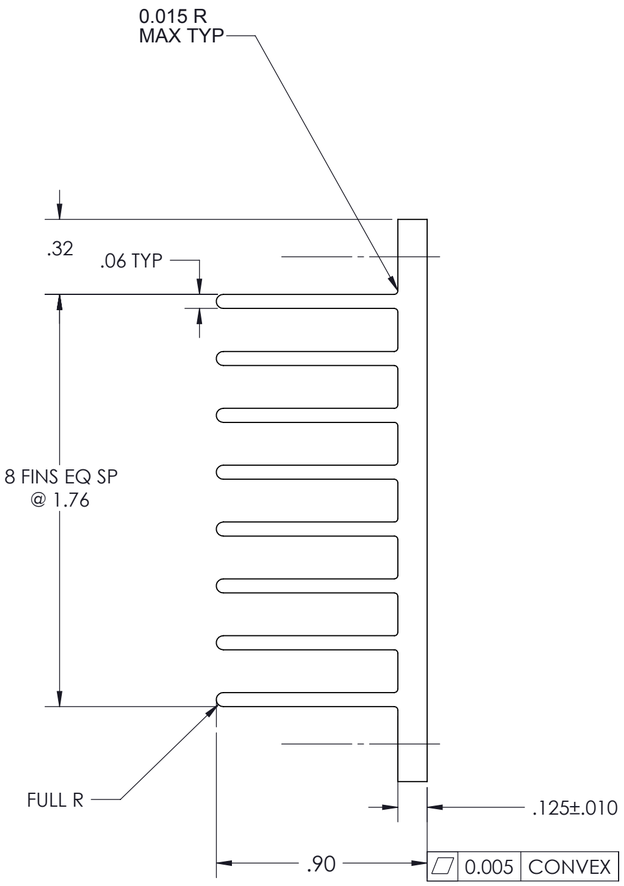

FREE CONVECTION	3.3
200 LFM	2.0
600 LFM	0.84

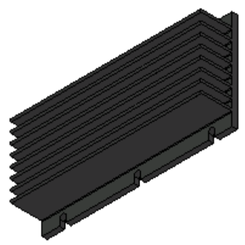

NOTES:
1. MATERIAL: 6063-T5 ALUMINUM.
2. REMOVE ALL LOOSE AND HANGING BURRS, OTHERWISE, BURRS SHALL NOT EXCEED .003.
3. ⬡ CLEAR FINISH RoHS COMPLIANT PER CST-0001, LATEST REVISION PER: A.) CHROMIUM FREE OR B.) TRIVALENT CHROMIUM IN ACCORDANCE WITH MIL-DLT-5541 TYPE II, CLASS 1A OR 3. CST-0003 FOR TYPES OF AVAILABLE FINISHES.
4. MECHANICALLY STAMP OR USE OF LASER, WHITE OR BLACK EPOXY INK FOR PART NUMBER. REVISION LEVEL NOT REQUIRED, BUT MAY BE INCLUDED AT THE FABRICATORS DESCRETION.
5. ⬡ DENOTES CRITICAL CHARACTERISTIC FOR LOT INSPECTION.
6. TOLERANCE ON ALL DIMENSIONS SHOWN AS REFERENCE SHALL FOLLOW STANDARD ALUMINUM ASSOCIATION TOLERANCE.

DRAWN BY	DATE
Krishna Kamath	05/14/2010

UNLESS OTHERWISE SPECIFIED DIMENSIONS ARE : INCH / [MM]
TOLERANCES ARE:
DECIMALS X.XX [X.X] = ±0.01 [0.25] X.XXX [X.XX] = ±0.005 [0.127]
ANGLES ±1°

THIRD ANGLE PROJECTION
DO NOT SCALE DRAWING

VICOR SWD

HEATSINK .9" HGT HORIZONTAL

SIZE	CAGE CODE	DWG NO	REV
C	67131	30089	3

SCALE 2:1 SHEET 1 OF 1