VICOR CONFIDENTIAL
THIS DOCUMENT AND THE DATA DISCLOSED HEREIN OR HEREWITH IS NOT TO BE REPRODUCED, USED OR DISCLOSED IN WHOLE OR IN PART TO ANYONE WITHOUT THE PERMISSION OF VICOR CORP.

REV.	DESCRIPTION		DATE	APPROVED
3	RELEASED PER E090033	AR	01/09/09	REJH
4	REVISED PER E092035	JS	11/16/09	REJH
5	REDRAWN PER E100871	DCS	06/31/10	KUK
6	REVISED PER E111266	VSS	12/22/11	REJH
7	REVISED PER E120702	ZMB	07/31/12	REJH

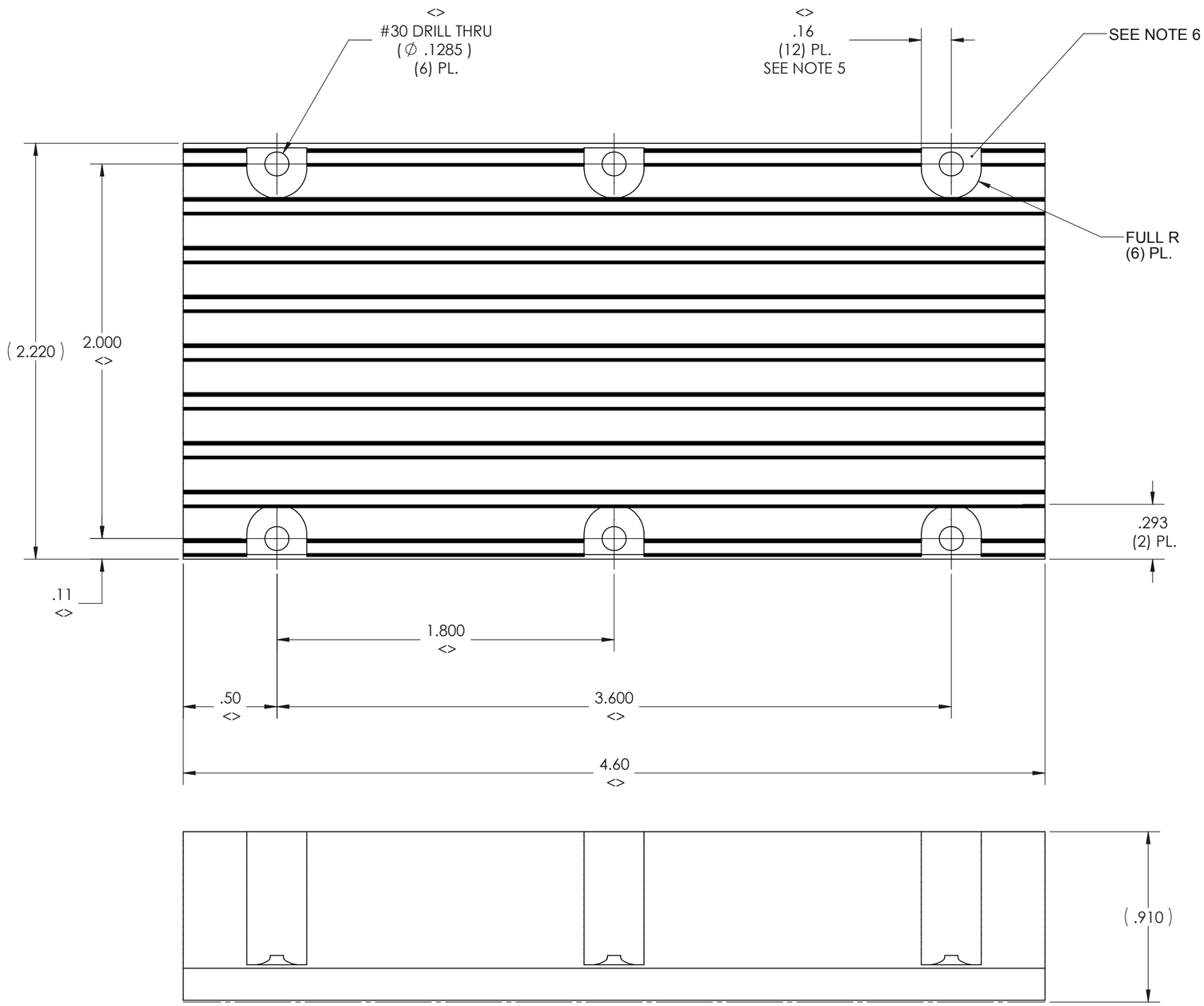

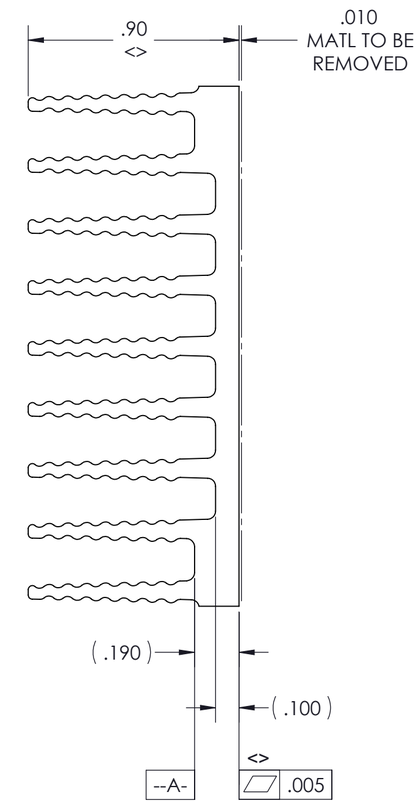

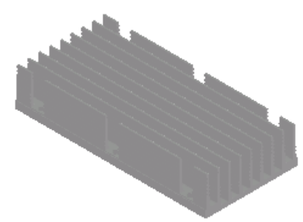

NOTES:
1. MATERIAL: EXTRUSION SEE SHEET 2 OF 2
2. REMOVE ALL BURRS AND SHARP EDGES.
<>3. CLEAR FINISH, RoHS COMPLAINT PER CST-0001, LATEST REVISION PER
A)CHROMIUM FREE, OR
B)TRIVALENT CHROMIUM IN ACCORDANCE WITH MIL-DTL-5541, TYPE II, CLASSS 1A OR 3.
SEE CST-0003 FOR TYPES OF AVAILABLE FINISHES.
4. "<>" DENOTES CRITICAL CHARACTERISTIC FOR LOT INSPECTION.
5. DIMENSIONS APPLIES AT SURFACE -A- (12) PL.
6. MACHINED SURFACE TO BE .010 MAX BELOW SURFACE -A- (6) PL.
7. DIMENSIONS ARE INCHES ONLY.

DRAWN BY	DATE
David Schmidt	06/30/2010

UNLESS OTHERWISE SPECIFIED
DIMENSIONS ARE : INCH / [MM]
TOLERANCES ARE:
DECIMALS: X.XX [X.X] = ±0.01 [0.25]; X.XXX [X.XX] = ±0.005 [0.127]
ANGLES: ±1°

THIRD ANGLE PROJECTION
DO NOT SCALE DRAWING

VICOR SWD

HS LF 22.86MM CFG "A"

SIZE	CAGE CODE	DWG NO	REV
C	67131	30181	7

SCALE 1:1 SHEET 1 OF 2

VICOR CONFIDENTIAL
THIS DOCUMENT AND THE DATA DISCLOSED HEREIN OR HEREWITH IS NOT TO BE REPRODUCED, USED OR DISCLOSED IN WHOLE OR IN PART TO ANYONE WITHOUT THE PERMISSION OF VICOR CORP.

REV.	DESCRIPTION	DATE	APPROVED
	SEE SHEET 1 OF 2		

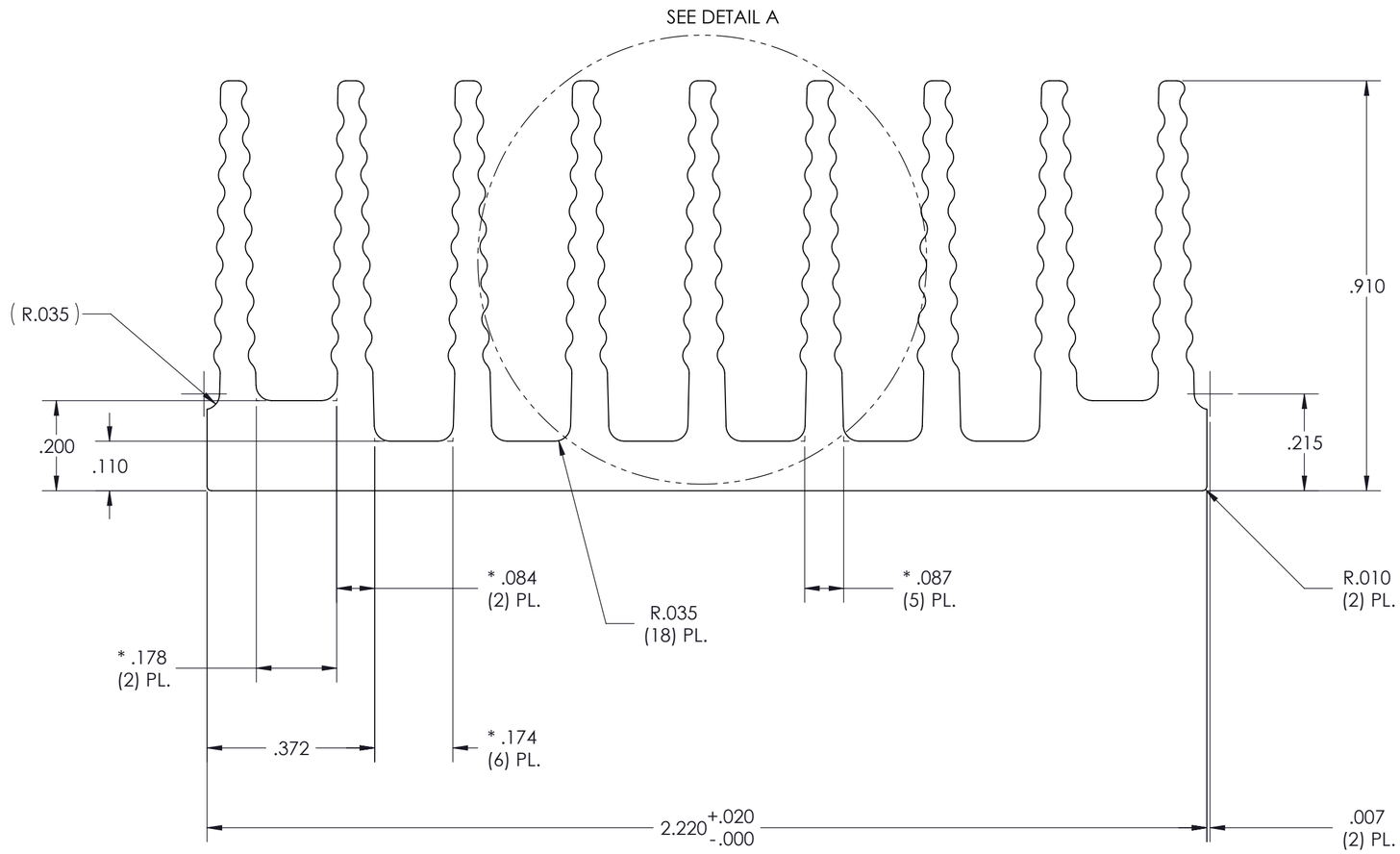

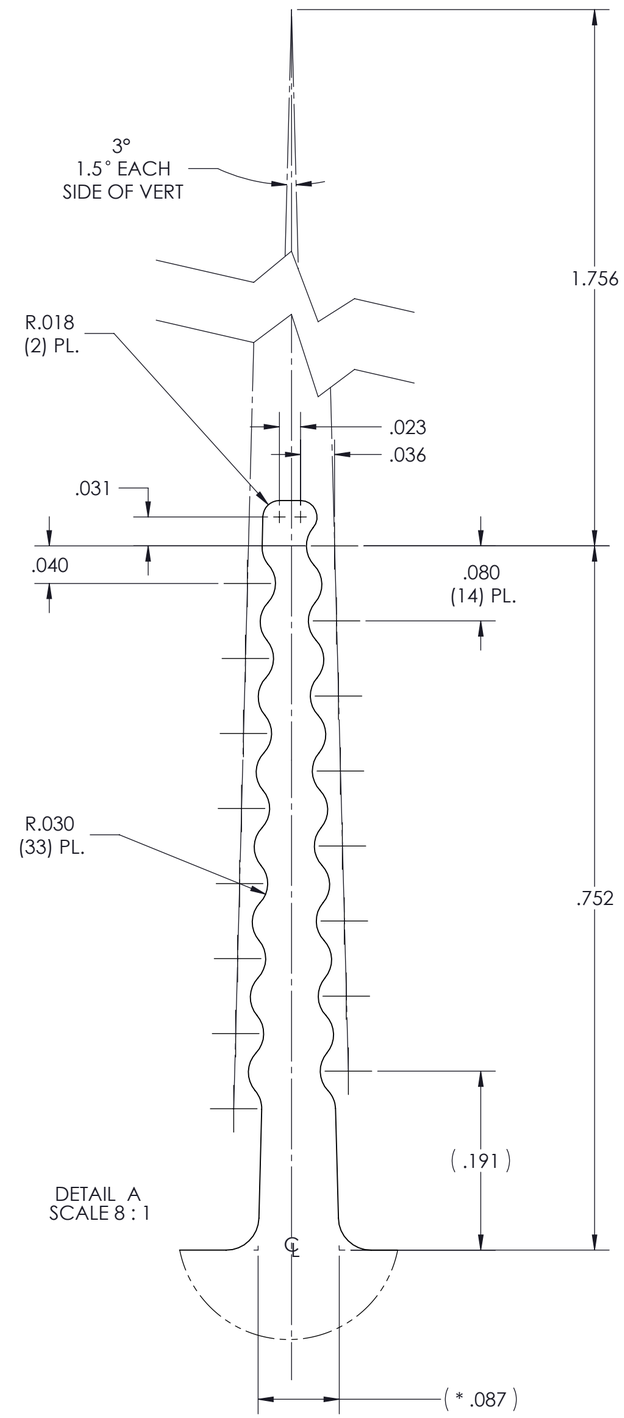

PROFILE COMMON FOR
30123
30181
30189
30182
30188

NOTES:
1. MATERIAL: ALUMINUM 6063-T5
2. * DENOTES DIMENSION TO THEORETICAL SHARP CORNER.
3. ALL DIMENSIONS ARE CRITICAL CHARACTERISTICS.
4. RoHS COMPLIANT PER CST-0001 LATEST REVISION.
5. WORKMANSHIP STANDARDS WS-0004, WS-0006 AND WS0007 APPLY TO THIS PART.
6. DIMENSIONS ARE INCHES ONLY.

DRAWN BY	DATE
David Schmidt	06/30/2010

UNLESS OTHERWISE SPECIFIED DIMENSIONS ARE : INCH / [MM]
TOLERANCES ARE:
DECIMALS: X.XX [X.X] = ±0.01 [0.25]; X.XXX [X.XX] = ±0.005 [0.127]
ANGLES: ±1°

THIRD ANGLE PROJECTION
DO NOT SCALE DRAWING

VICOR SWD

HS LF 22.86MM CFG "A" EXTRUSION

SIZE	CAGE CODE	DWG NO	REV
C	67131	30181	7

SCALE 1:1 | SHEET 2 OF 2