VICOR CONFIDENTIAL

THIS DOCUMENT AND THE DATA DISCLOSED HEREIN OR HEREWITH IS NOT TO BE REPRODUCED, USED OR DISCLOSED IN WHOLE OR IN PART TO ANYONE WITHOUT THE PERMISSION OF VICOR CORP.

REV.	DESCRIPTION	INTL	DATE	APVD
1	RELEASED PER E050348	PEI	11/15/2005	ECF
2	REVISED PER E100872	KUK	06/30/2010	DCS
3	2ND SHEET PER E101049	DCS	08/11/2010	REJH
4	REVISED PER E131123a	REW	08/06/2013	TO
5	REVISED PER E131631	GCK	11/21/2013	TO
6	REVISED PER E180447	REJH	06/19/18	RLT

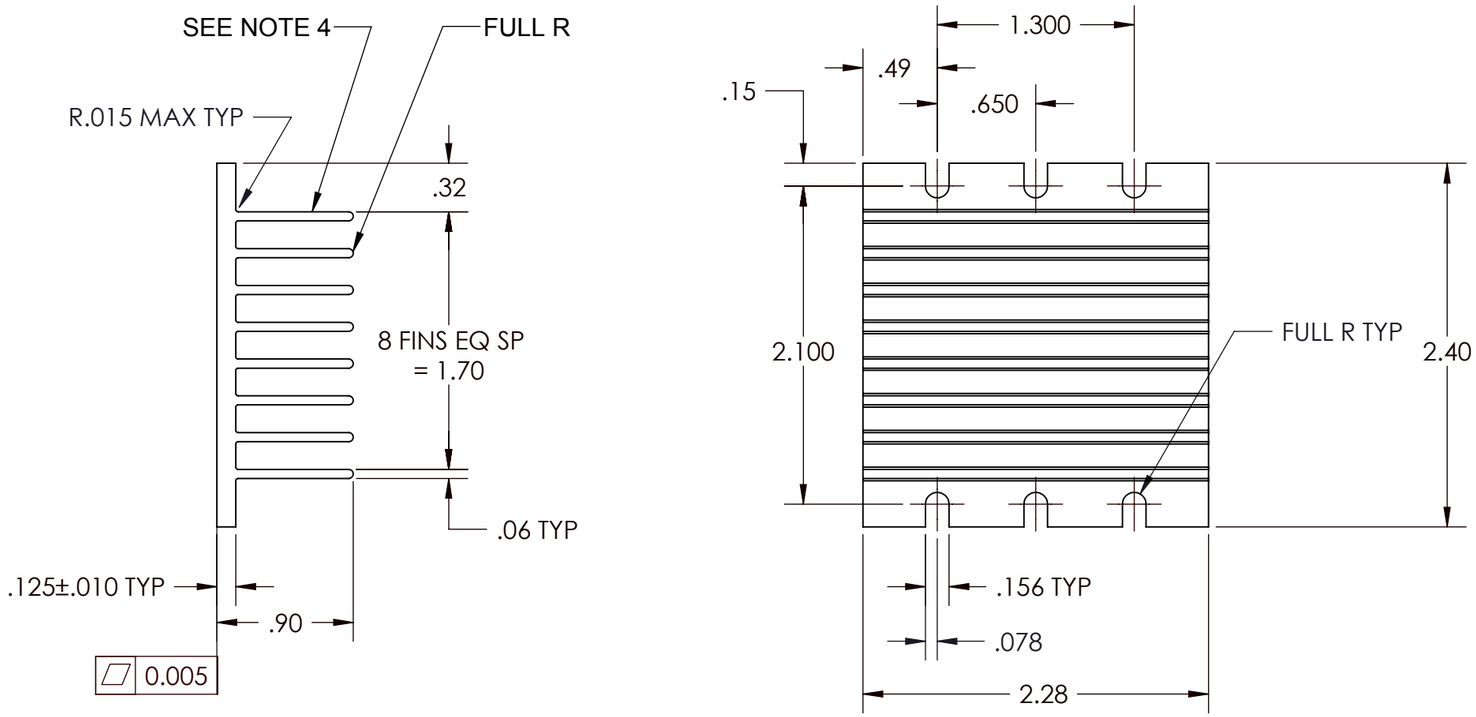

NOTES:

1. MATERIAL: ALUMINUM 6063-T5.
2. CLEAR FINISH RoHS COMPLIANT PER CST-0001,LATEST REVISION PER:
<> A.) CHROMIUM FREE OR B.) TRIVALENT CHROMIUM IN ACCORDANCE WITH MIL-DTL-5541 TYPE II, CLASS 1A OR 3. SEE CST-0003 FOR TYPES OF AVAILABLE FINISHES.
3. REMOVE ALL LOOSE BURRS.
4. MECHANICALLY STAMP OR USE WHITE OR BLACK EPOXY INK FOR PART NUMBER.
REVISION LEVEL NOT REQUIRED, BUT MAY BE INCLUDED AT THE FABRICATOR'S DISCRETION.
5. <> DENOTES CRITICAL CHARACTERISTIC FOR LOT INSPECTION.
6. DIMENSIONS ARE INCHES ONLY.

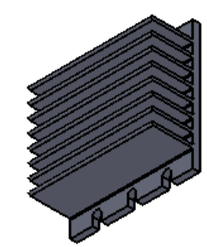

DRAWN BY	DATE

UNLESS OTHERWISE SPECIFIED DIMENSIONS ARE MM /[INCH]

TOLERANCES ARE:
DECIMALS X.XX [X.X] = ±0.25 [0.01] X.XXX [X.XX] = ±0.127 [0.005]
ANGLES ±1°

THIRD ANGLE PROJECTION

DO NOT SCALE DRAWING

VICOR SWD

HORIZONTAL HEATSINK MINI MOD

SIZE	CAGE CODE	DWG NO	REV
B	67131	30191	6

SCALE 1:1 SHEET 1 OF 2

VICOR CONFIDENTIAL

THIS DOCUMENT AND THE DATA DISCLOSED HEREIN OR HEREWITH IS NOT TO BE REPRODUCED, USED OR DISCLOSED IN WHOLE OR IN PART TO ANYONE WITHOUT THE PERMISSION OF VICOR CORP.

REVISIONS

REV	DESCRIPTION	DATE	APPROVED
	SEE SHEET 1		

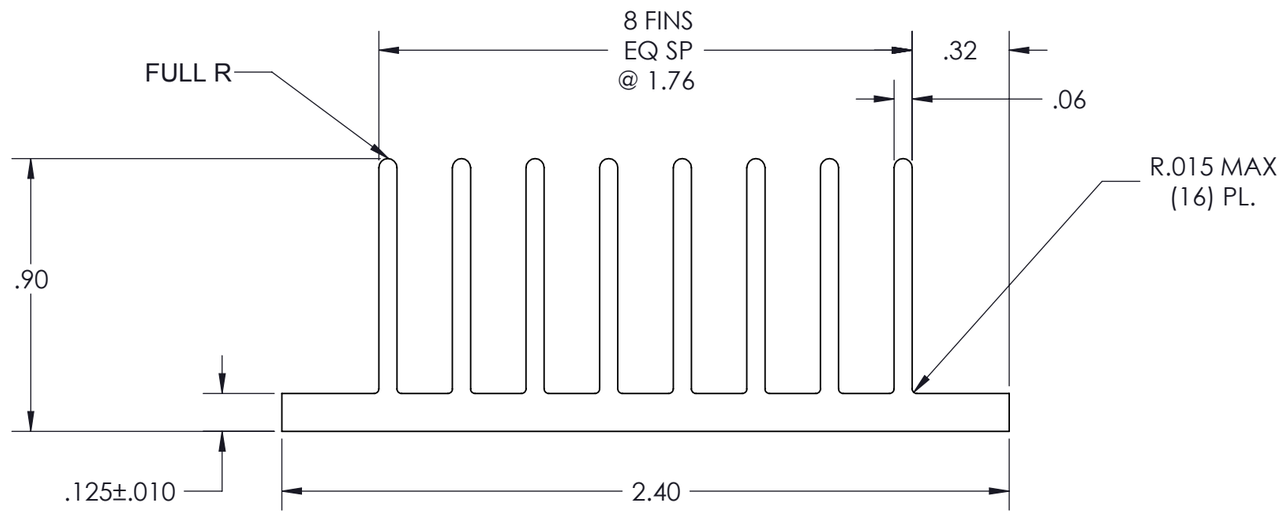

PROFILE COMMON FOR
08450
30191

NOTES:
1. MATERIAL: ALUMINUM 6063-T5
2. RoHS COMPLIANT PER CST-0001 LATEST REVISION.
3. BREAK ALL EDGES AND SHARP CORNERS.
4. DIMENSIONS ARE INCHES ONLY.

DRAWN BY	DATE
DAVID SCHMIDT	7/29/10

UNLESS OTHERWISE SPECIFIED
DIMENSIONS ARE : INCH / [MM]

TOLERANCES ARE:
DECIMALS
X.XX [X.X] = ±0.01 [0.25]
X.XXX [X.XX] = ±0.005 [0.127]
ANGLES
±1°

THIRD ANGLE PROJECTION

DO NOT SCALE DRAWING

VICOR

SWD

HORIZONTAL HEATSINK MINI MOD, EXTRUSION

SIZE	CAGE CODE	DWG NO	REV
B	67131	30191	6

SCALE 1:1

SHEET 2 OF 2