VICOR CONFIDENTIAL
THIS DOCUMENT AND THE DATA DISCLOSED HEREIN OR HEREWITH IS NOT TO BE REPRODUCED, USED OR DISCLOSED IN WHOLE OR IN PART TO ANYONE WITHOUT THE PERMISSION OF VICOR CORP.

REV.	DESCRIPTION		DATE	APPROVED
3	RELEASED PER E090033	AR	01/09/09	REJH
4	REVISED PER E091548	JS	09/03/09	REJH
5	REDRAWN PER E100887	DCS	06/31/10	KUK
6	REVISED PER E111266	VSS	12/22/11	REJH

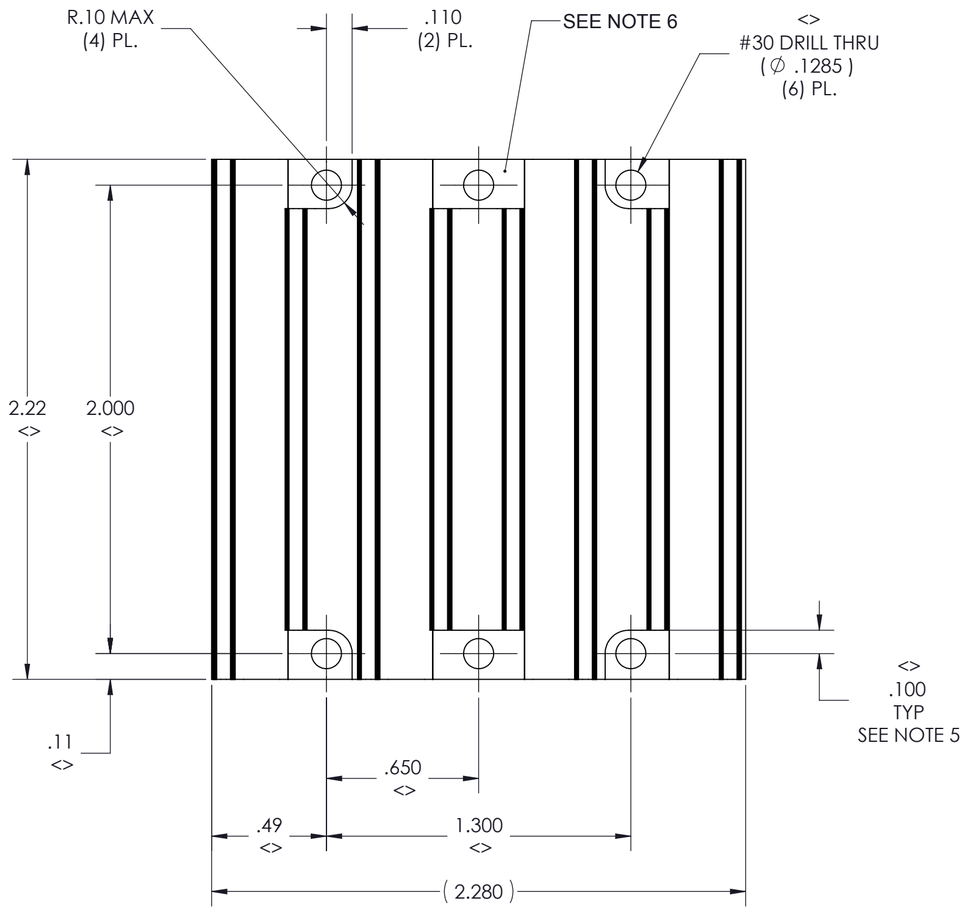

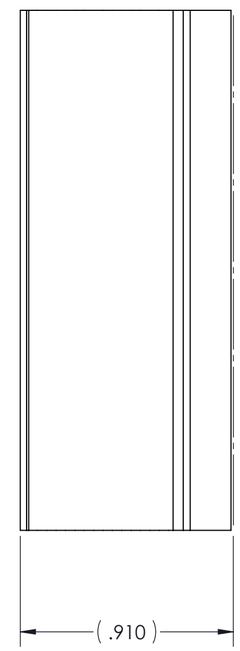

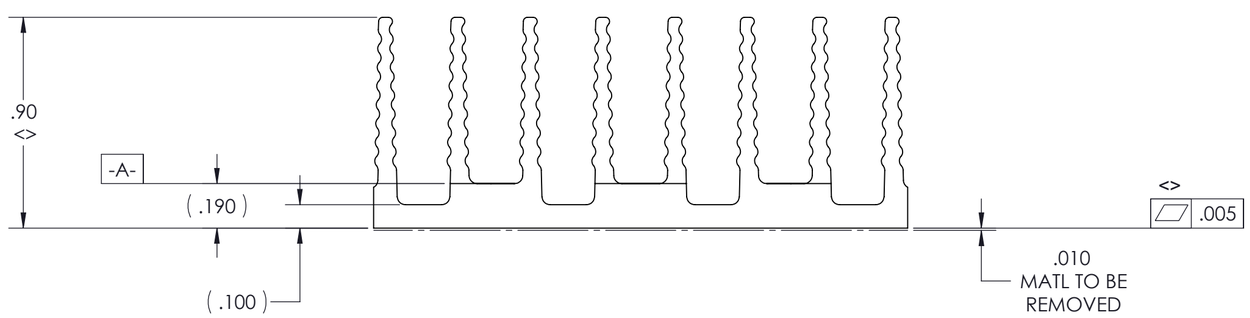

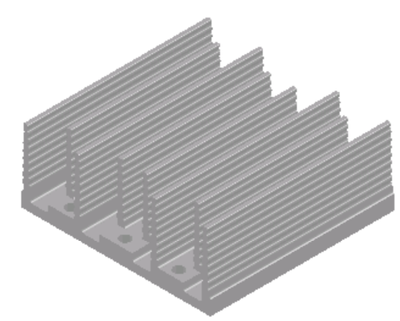

NOTES:
1. MATERIAL: EXTRUSION SEE SHEET 2 OF 2
2. REMOVE ALL BURRS AND SHARP EDGES.
<>3. CLEAR FINISH, RoHS COMPLAINT PER CST-0001, LATEST REVISION PER
A)CHROMIUM FREE, OR
B)TRIVALENT CHROMIUM IN ACCORDANCE WITH MIL-DTL-5541, TYPE II, CLASSS 1A OR 3.
SEE CST-0003 FOR TYPES OF AVAILABLE FINISHES.
4. "<>" DENOTES CRITICAL CHARATERISTIC FOR LOT INSPECTION.'
5. DIMENSIONS APPLIES AT SURFACE -A- (2) PL.
6. MACHINED SURFACE TO BE .010 MAX BELOW SURFACE -A- (6) PL.
7. DIMENSIONS ARE INCHES ONLY.

DRAWN BY	DATE	VICOR SWD
David Schmidt	06/23/2010	
UNLESS OTHERWISE SPECIFIED DIMENSIONS ARE : INCH / [MM] TOLERANCES ARE: DECIMALS X.XX [X.X] = ±0.01 [0.25] X.XXX [X.XX] = ±0.005 [0.127] ANGLES ±1°		HS XF 22.86MM CFG "B"
THIRD ANGLE PROJECTION	SIZE C	CAGE CODE 67131 / DWG NO 30724 / REV 6
DO NOT SCALE DRAWING	SCALE 2:1	SHEET 1 OF 2

VICOR CONFIDENTIAL
THIS DOCUMENT AND THE DATA DISCLOSED HEREIN OR HEREWITH IS NOT TO BE REPRODUCED, USED OR DISCLOSED IN WHOLE OR IN PART TO ANYONE WITHOUT THE PERMISSION OF VICOR CORP.

REV.	DESCRIPTION	DATE	APPROVED
	SEE SHEET 1 OF 2		

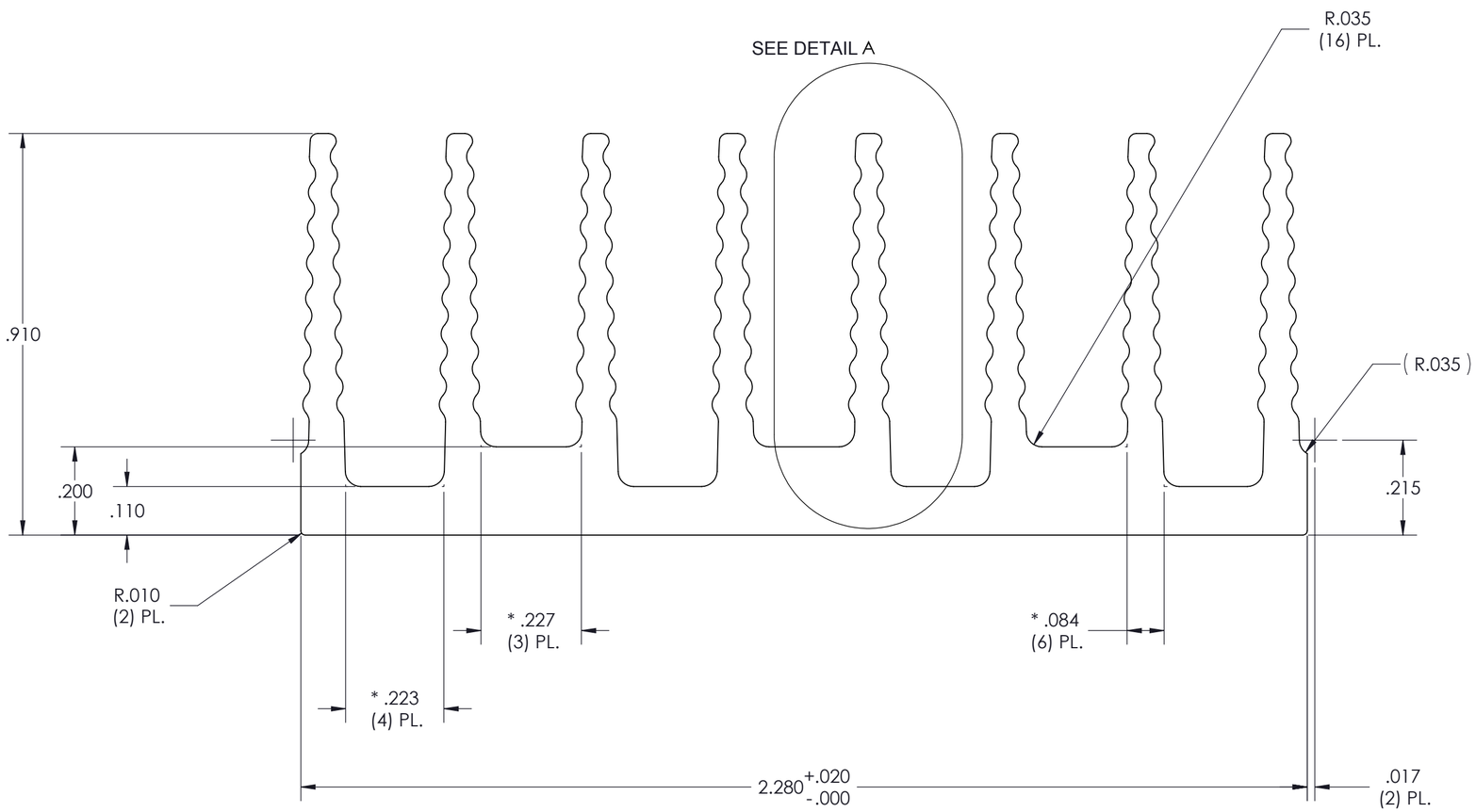

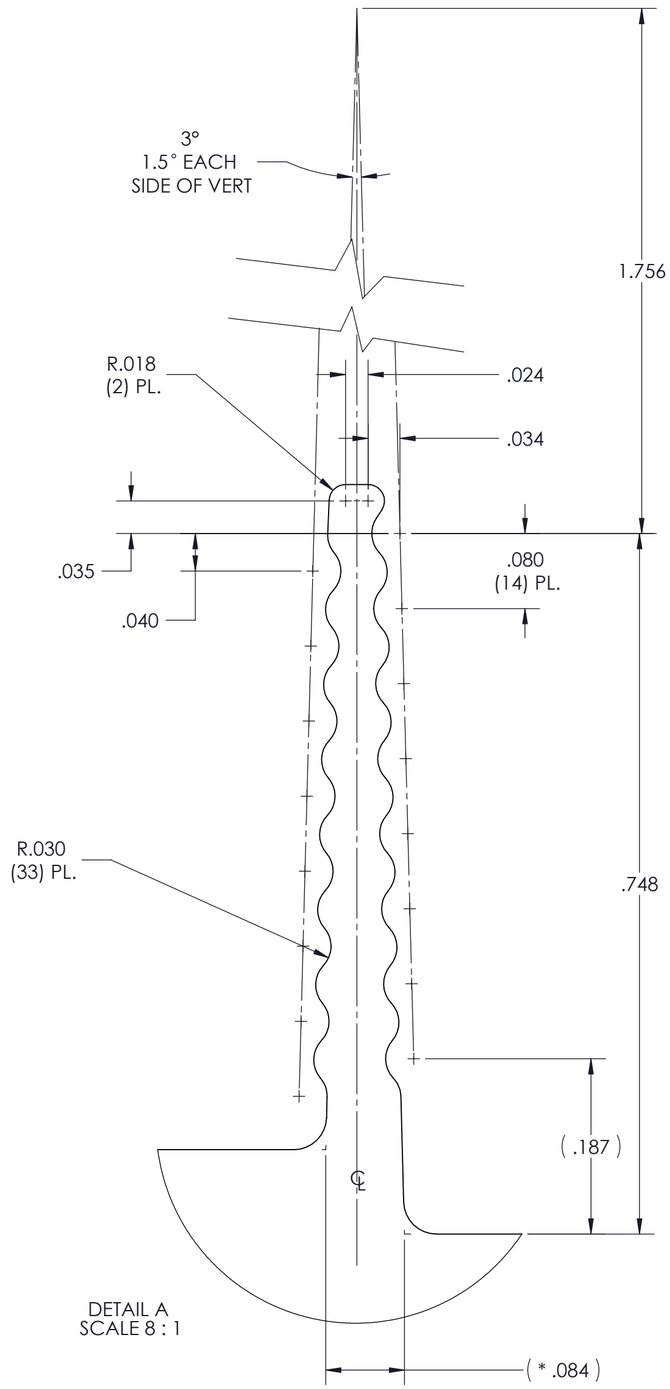

PROFILE COMMON FOR
30270
30724
30269
30725

NOTES:
1. MATL: ALUMINUM 6063-T5
2. * DENOTES DIMENSION TO THEORETICAL SHARP CORNER.
3. ALL DIMENSIONS ARE CRITICAL CHARACTERISTICS.
4. RoHS COMPLIANT PER CST-0001 LATEST REVISION.
5. WORKMANSHIP STANDARDS WS-0004, WS-0006 AND WS-0007 APPLY TO THIS PART.
6. DIMENSIONS ARE INCHES ONLY.

DRAWN BY	DATE
David Schmidt	06/23/2010

UNLESS OTHERWISE SPECIFIED DIMENSIONS ARE : INCH / [MM]
TOLERANCES ARE:
DECIMALS X.XX [X.X] = ±0.01 [0.25] X.XXX [X.XX] = ±0.005 [0.127]
ANGLES ±1°

THIRD ANGLE PROJECTION
DO NOT SCALE DRAWING

VICOR SWD

HS XF 22.86MM CFG "B"

SIZE	CAGE CODE	DWG NO	REV
C	67131	30724	6

SCALE 2:1 SHEET 2 OF 2