VICOR CONFIDENTIAL
THIS DOCUMENT AND THE DATA DISCLOSED HEREIN OR HEREWITH IS NOT TO BE REPRODUCED, USED OR DISCLOSED IN WHOLE OR IN PART TO ANYONE WITHOUT THE PERMISSION OF VICOR CORP.

REV.	DESCRIPTION		DATE	APPROVED
1	RELEASED PER E050348	PEI	11/15/05	ECF
2	REVISED PER E072386	JS	10/02/07	REJH
3	REVISED PER E090033	AR	01/09/09	REJH
4	REVISED PER E091548	JS	09/03/09	REJH
5	REVISED PER E100902	DCS	7/14/10	KUK
6	REVISED PER E111105	GCK	11/11/11	REJH

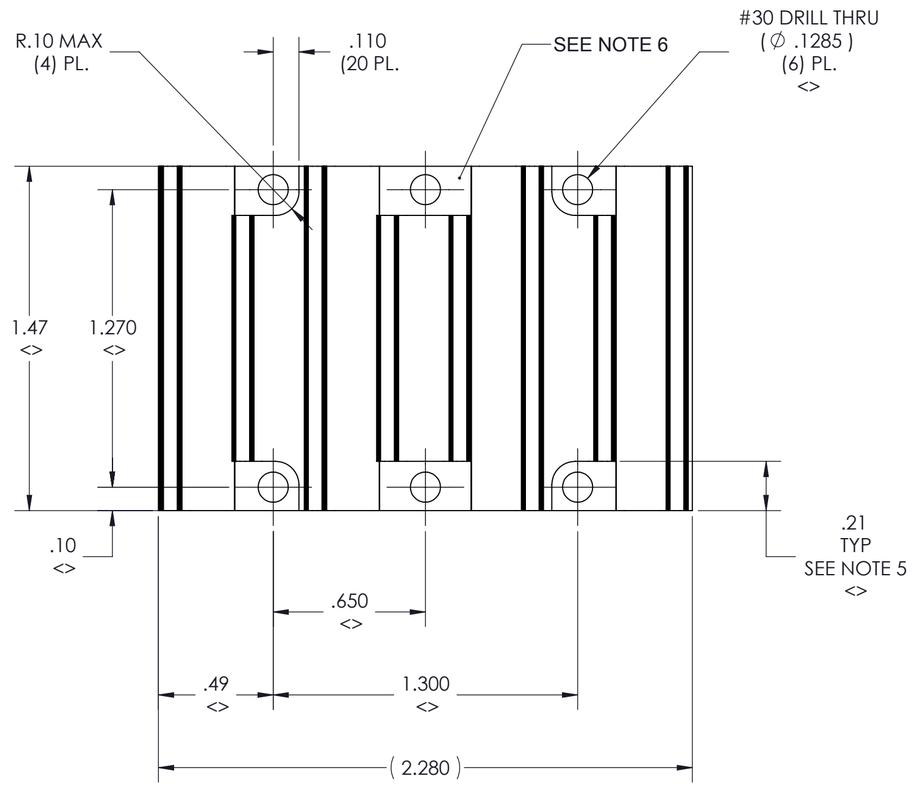

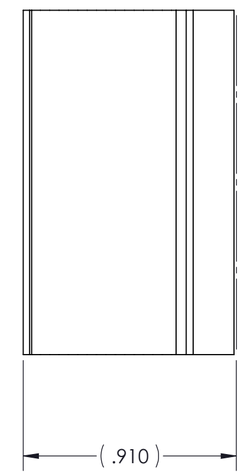

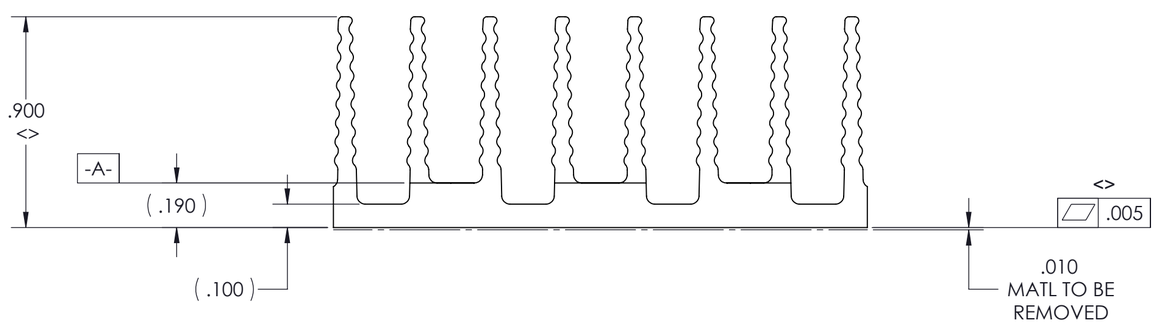

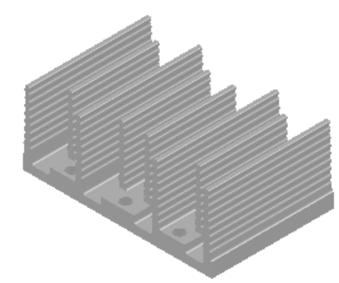

NOTES:
1. MATERIAL: EXTRUSION SEE SHEET 2 OF 2.
2. REMOVE ALL BURRS AND SHARP EDGES.
<>3. CLEAR FINISH, RoHS COMPLIANT, PER CST-0001
LATEST REVISION PER:
A.) CHROMIUM FREE, OR
B.) TRIVALENT CHROMIUM IN ACCORDANCE WITH
MIL-DTL-5541, TYPE II CLASS 1A OR 3.
SEE CST-0003 FOR TYPES OF AVILABLE FINISHES
4. "<>" DENOTES CRITICAL CHARACTERISTIC FOR LOT INSPECTION.'
5.DIMENSIONS APPLIES AT SURFACE -A- (2) PL.
6.MACHINED SURFACE TO BE .010 MAX BELOW SURFACE -A- (6) PL.
7.DIMENSIONS ARE INCHES ONLY.

DRAWN BY	DATE
David Schmidt	06/28/2010

UNLESS OTHERWISE SPECIFIED
DIMENSIONS ARE : INCH / [MM]
TOLERANCES ARE:
DECIMALS X.XX [X.X] = ±0.01 [0.25]
X.XXX [X.XX] = ±0.005 [0.127]
ANGLES ±1°
THIRD ANGLE PROJECTION
DO NOT SCALE DRAWING

VICOR SWD

HTSNK, "C" X-FLOW, .9H LOW FLOW, THRU HOLE

SIZE	CAGE CODE	DWG NO	REV
C	67131	30725	6

SCALE 2:1 SHEET 1 OF 2

VICOR CONFIDENTIAL
THIS DOCUMENT AND THE DATA DISCLOSED HEREIN OR HEREWITH IS NOT TO BE REPRODUCED, USED OR DISCLOSED IN WHOLE OR IN PART TO ANYONE WITHOUT THE PERMISSION OF VICOR CORP.

REVISIONS			
REV	DESCRIPTION	DATE	APPROVED
	SEE SHEET 1		

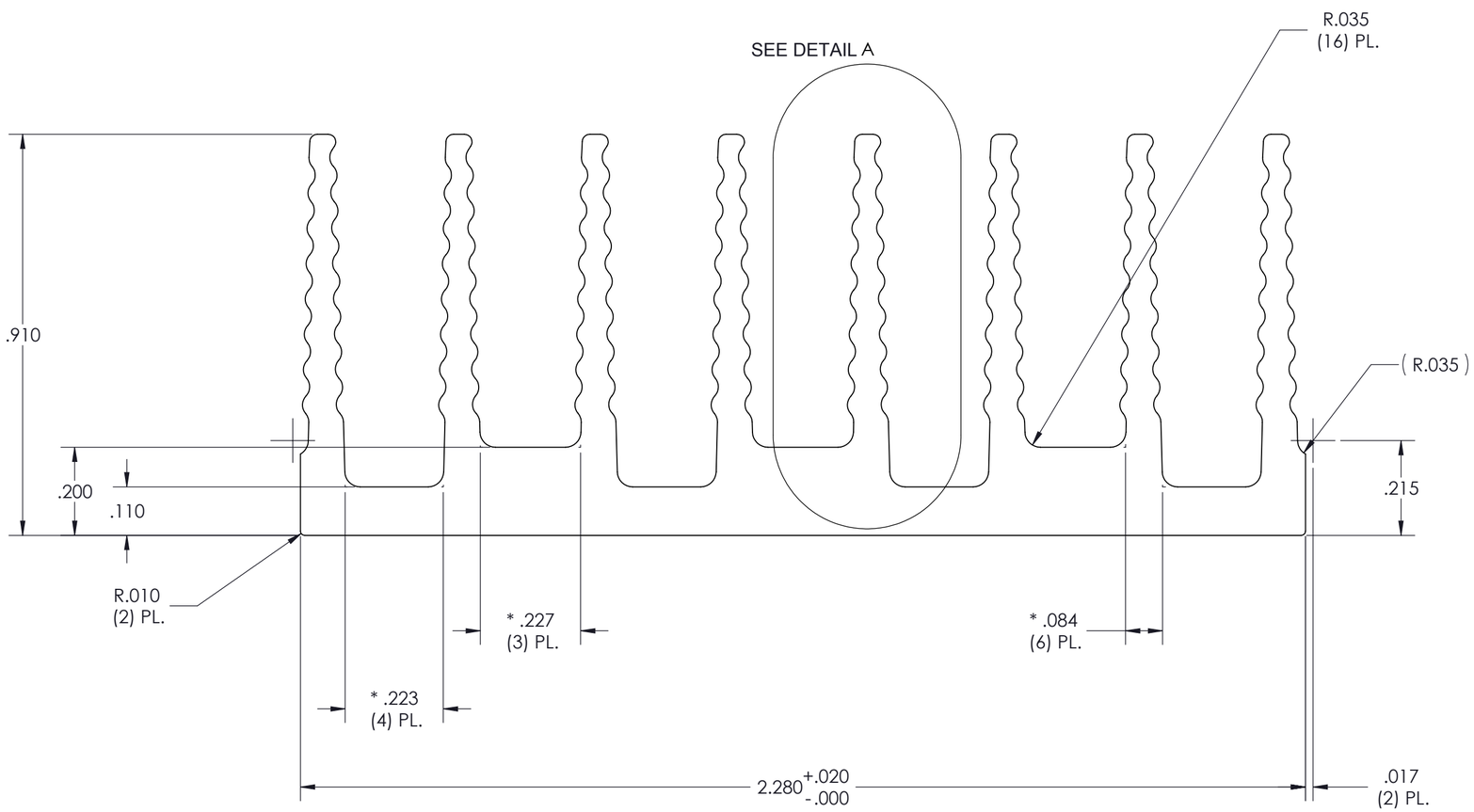

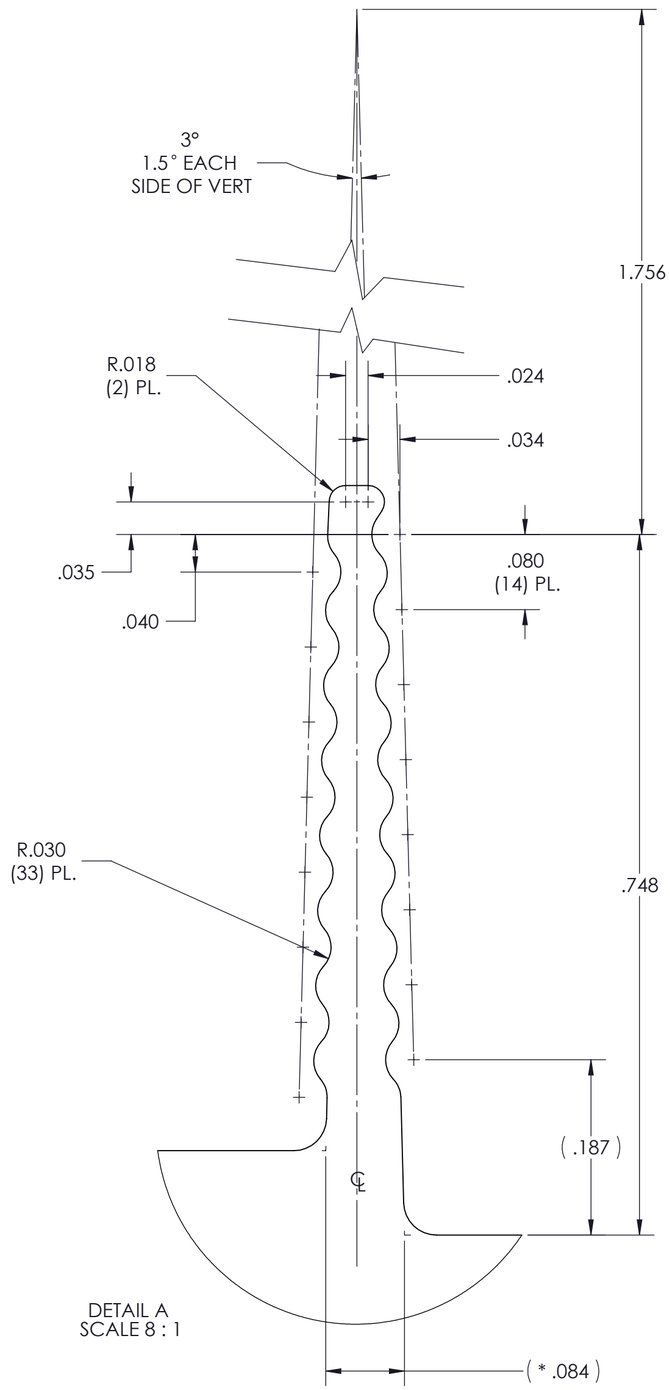

PROFILE COMMON FOR
30270
30724
30269
30725

NOTES:
1. MATL: ALUMINUM 6063-T5
2. * DENOTES DIMENSION TO THEORETICAL SHARP CORNER.
3. ALL DIMENSIONS ARE CRITICAL CHARACTERISTICS.
4. RoHS COMPLIANT PER CST-0001 LATEST REVISION.
5. WORKMANSHIP STANDARDS WS-0004, WS-0006 AND WS-0007 APPLY TO THIS PART.
6. DIMENSIONS ARE INCHES ONLY.

DRAWN BY	DATE
David Schmidt	06/28/2010

UNLESS OTHERWISE SPECIFIED DIMENSIONS ARE : INCH / [MM]
TOLERANCES ARE:
DECIMALS X.XX [X.X] = ±0.01 [0.25] X.XXX [X.XX] = ±0.005 [0.127]
ANGLES ±1°

THIRD ANGLE PROJECTION

DO NOT SCALE DRAWING

VICOR SWD

HTSNK, "C" X-FLOW, .9H LOW FLOW, THRU HOLE EXTRUSION

SIZE	CAGE CODE	DWG NO	REV
C	67131	30725	6

SCALE 2:1 SHEET 2 OF 2