VICOR CONFIDENTIAL

THIS DOCUMENT AND THE DATA DISCLOSED HEREIN OR HEREWITH IS NOT TO BE REPRODUCED, USED OR DISCLOSED IN WHOLE OR IN PART TO ANYONE WITHOUT THE PERMISSION OF VICOR CORP.

REV.	DESCRIPTION		DATE	APPROVED
1	RELEASED PER E050349	PEI	11/15/05	ECF
2	REVISED PER E100872	KUK	06/30/10	DCS
3	REVISED PER E120467	GCK	5/22/12	TO
4	REVISED PER E180447	REJH	06/19/18	RLT

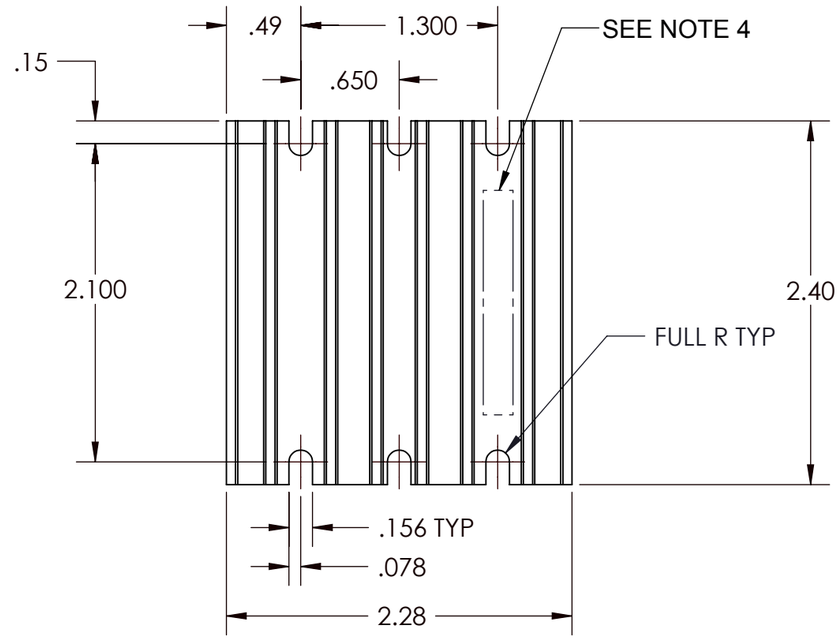

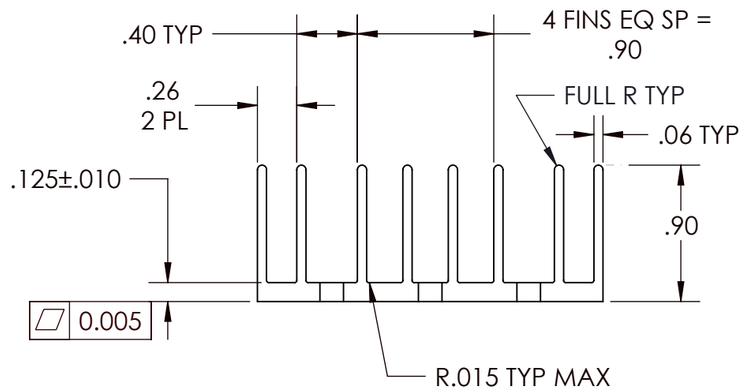

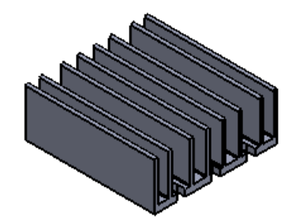

NOTES:
1. MATERIAL: ALUMINUM 6063-T5.
2. CLEAR FINISH, RoHS COMPLIANT PER CST-0001, LATEST REVISION PER
   A.) CHROMIUM FREE, OR
   B.) TRIVALENT CHROMIUM IN ACCORDANCE WITH MIL-DTL-5541, TYPE II CLASS 1A OR 3. SEE CST-0003 FOR TYPES OF AVAILABLE FINISHES.
3. REMOVE ALL LOOSE BURRS.
4. MECHQANICALLY STAMP OR WHITE EPOXY INK IS ACCEPTABLE TO PLACE PART NUMBER IN AREA SHOWN.
5. DIMENSIONS ARE INCHES ONLY.

DRAWN BY	DATE
P. E. IENI	

UNLESS OTHERWISE SPECIFIED DIMENSIONS ARE : INCH / [MM]

TOLERANCES ARE:
DECIMALS
X.XX [X.X] = ±0.01 [0.25]
X.XXX [X.XX] = ±0.005 [0.127]
ANGLES ±1°

THIRD ANGLE PROJECTION

DO NOT SCALE DRAWING

VICOR SWD

HS XF 22.8MM MINI MOD

SIZE	CAGE CODE	DWG NO	REV
B	67131	30771	4

SCALE 1:1 SHEET 1 OF 1