VICOR CONFIDENTIAL
THIS DOCUMENT AND THE DATA DISCLOSED HEREIN OR HEREWITH IS NOT TO BE REPRODUCED, USED OR DISCLOSED IN WHOLE OR IN PART TO ANYONE WITHOUT THE PERMISSION OF VICOR CORP.

REVISIONS

REV	DESCRIPTION		DATE	APPROVED
1	RELEASED PER E050349	PEI	11/15/05	ECF
2	REVISED PER E100841	KUK	06/22/10	GCK
3	REVISED PER E101411	KUK	11/26/10	REJH

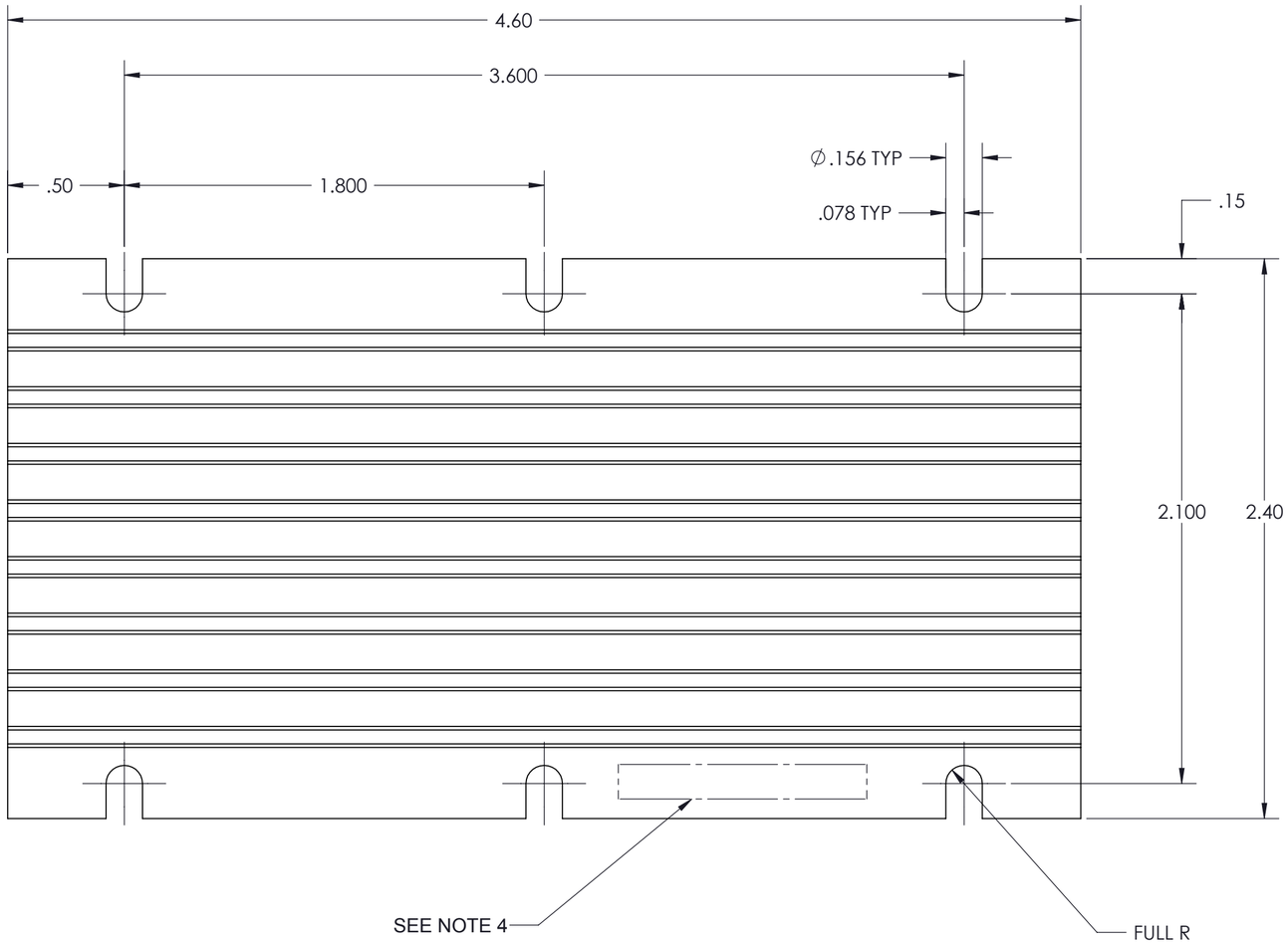

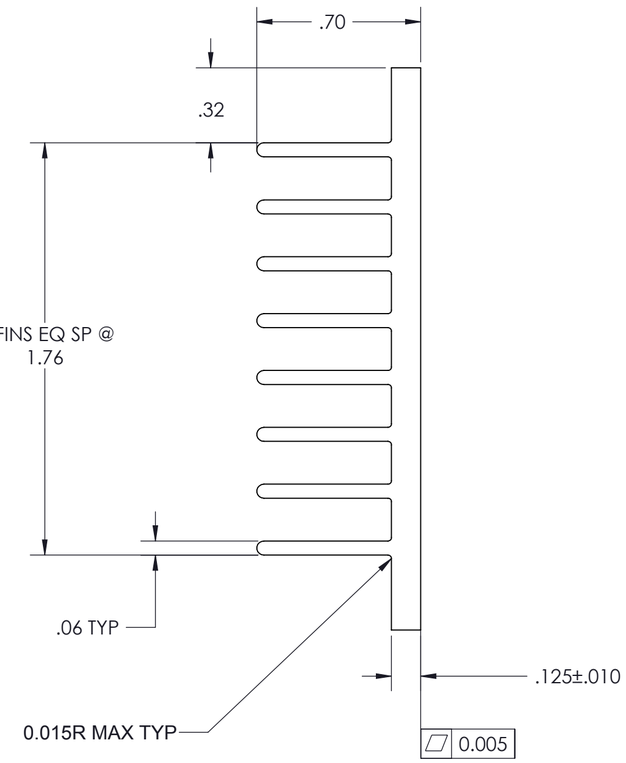

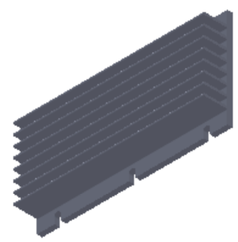

NOTES:
1. MATERIAL: ALUMINUM, 6063-T5, (OR MAKE FROM P/N: 30089 RAW MATERIAL).
2. REMOVE ALL LOOSE AND HANGING BURRS, OTHERWISE, BURRS SHALL NOT EXCEED .003.
3. ⬡ CLEAR FINISH, RoHS COMPLIANT, CHROMIUM FREE PER CST-0001, LATEST REVISION.
4. PERMANENTLY MARK PART NUMBER AND REVISION LEGIBLY IN AREA SHOWN.
5. ⬡ DENOTES CRITICAL CHARACTERISTIC FOR LOT INSPECTION.
6. TOLERANCE ON ALL DIMENSIONS SHOWN AS REFERENCE SHALL FOLLOW STANDARD ALUMINUM ASSOCIATION TOLERANCE.

DRAWN	DATE
P.E.IENI	10/25/05

MATERIAL

FINISH

UNLESS OTHERWISE SPECIFIED DIMENSIONS ARE INCH [MM]
TOLERANCES ARE:
DECIMALS ANGLES
X.XX [X.X] = ±0.01 [0.25] ±1°
X.XXX [X.XX] = ±0.005 [0.127]

THIRD ANGLE PROJECTION

DO NOT SCALE DRAWING

VICOR

SWD

HEATSINK 0.70" HGT. HORIZONTAL

SIZE	CAGE CODE	DWG NO	REV
C	67131	30775	3

SCALE 2 : 1

SHEET 1 OF 1