VICOR CONFIDENTIAL

THIS DOCUMENT AND THE DATA DISCLOSED HEREIN OR HEREWITH IS NOT TO BE REPRODUCED, USED OR DISCLOSED IN WHOLE OR IN PART TO ANYONE WITHOUT THE PERMISSION OF VICOR CORP.

REV.	DESCRIPTION	INTL	DATE	APVD
1	RELEASED PER E060599	PEI	3/16/06	MB
2	REVISED PER E060019	REJH	10/27/06	FN
3	RELEASED PER E080938	SA	5/6/08	REJH
4	RELEASED PER E101309	KUK	10/22/10	AR
5	REVISED PER E180527	CMY	7/24/18	GCK

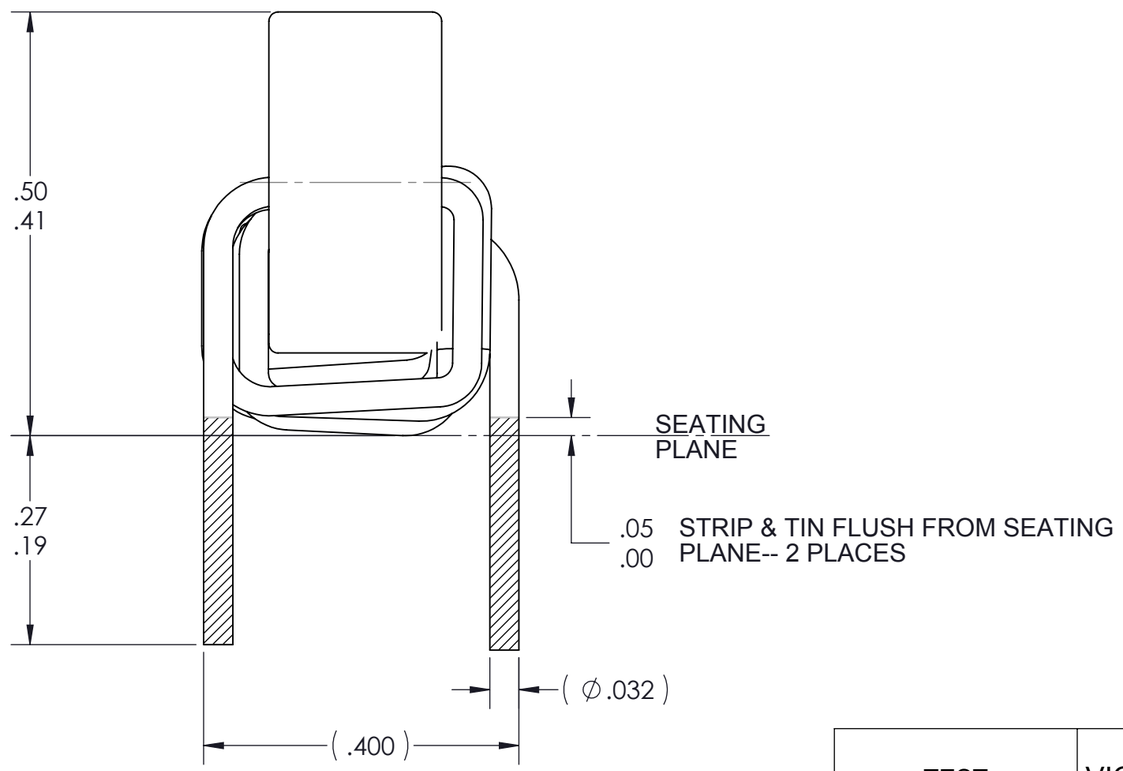

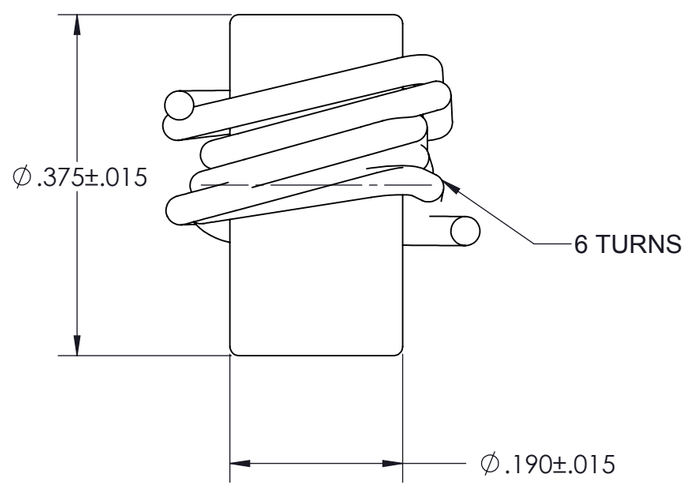

TEST	VICOR PART NO	WINDING	NO. OF TURNS	INDUCTANCE (uH)
100 KHz Vac = 10mV	32497	1 PRIMARY	6	1.70 - 2.15

NOTES:
1. ASSEMBLY TO BE FREE OF NICKS.
2. WINDINGS TO BE EVENLY SPACED.
3. RoHS COMPLIANT, LEAD FREE PER CST-0001 LATEST REVISION.
4. GENERAL WORKMANSHIP STANDARDS FOR MAGNETIC COMPONENTS PER WS-0002.

DRAWN BY	DATE
	9/16/2010

UNLESS OTHERWISE SPECIFIED DIMENSIONS ARE : INCH / [MM]

TOLERANCES ARE:
DECIMALS
X.XX [X.X] = ±0.01 [0.25]
X.XXX [X.XX] = ±0.005 [0.127]
ANGLES ±1°

THIRD ANGLE PROJECTION

DO NOT SCALE DRAWING

VICOR

SWD

IND OUTPUT ASSY 1.8uH 6T#20 (32496) DWG

SIZE	CAGE CODE	DWG NO	REV
B	67131	32498	5

SCALE 6:1

SHEET 1 OF 1