VICOR CONFIDENTIAL

THIS DOCUMENT AND THE DATA DISCLOSED HEREIN OR HEREWITH IS NOT TO BE REPRODUCED, USED OR DISCLOSED IN WHOLE OR IN PART TO ANYONE WITHOUT THE PERMISSION OF VICOR CORP.

REV.	DESCRIPTION	INTL	DATE	APVD
01	RELEASED PER E100198	JS	02/26/10	REJH

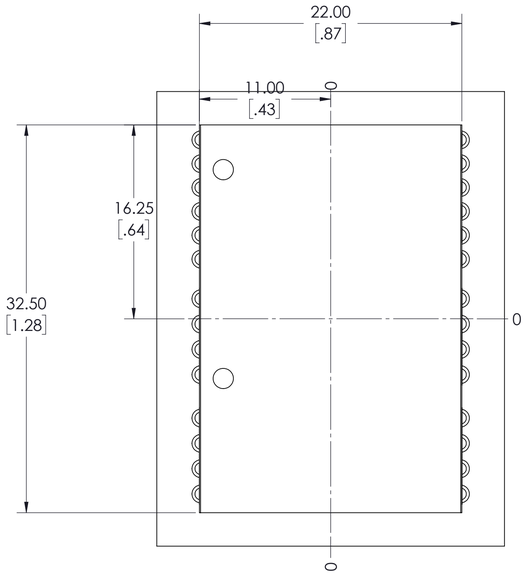

TOP VIEW (COMPONENT SIDE)

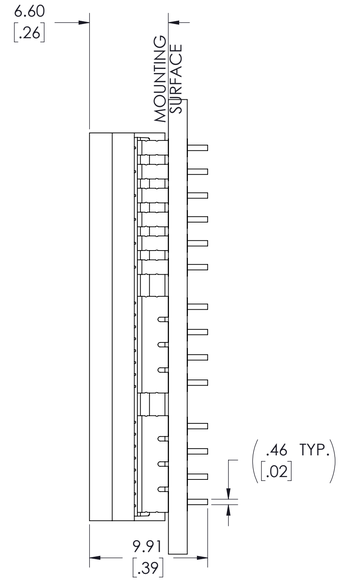

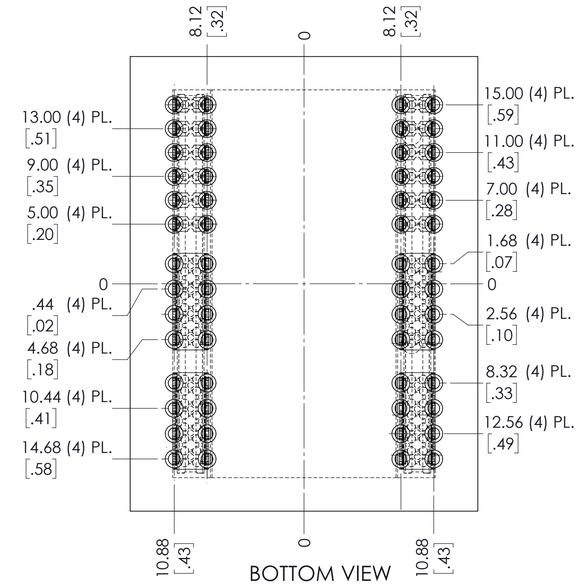

BOTTOM VIEW

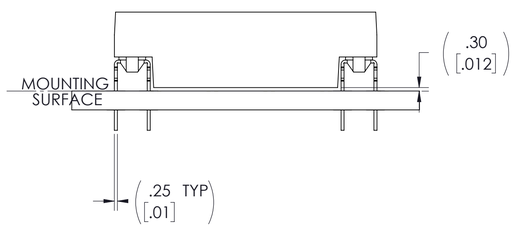

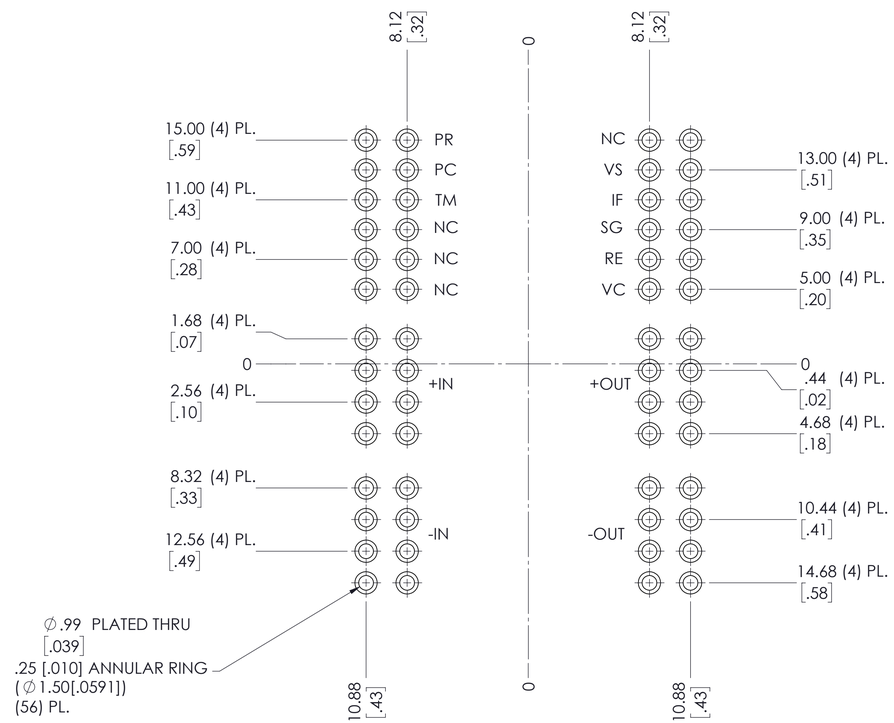

RECOMMENDED LAND PATTERN
(COMPONENT SIDE SHOWN)

NOTE:

1. RoHS COMPLIANT PER CST-0001 LATEST REVISION

DRAWN BY	DATE

UNLESS OTHERWISE SPECIFIED DIMENSIONS ARE MM [INCH]
TOLERANCES ARE:
DECIMALS X.XX [X.XX] = ±0.25 [0.01] ANGLES ±1°
X.XXX [X.XXX] = ±0.127 [0.005]

THIRD ANGLE PROJECTION

DO NOT SCALE DRAWING

VICOR SWD

OUTLINE DWG, PRM2(RS), TH-LEAD, PKG3

SIZE	CAGE CODE	DWG NO	REV
D	67131	36132	01

SCALE 4:1 SHEET 1 OF 1