VICOR CONFIDENTIAL

THIS DOCUMENT AND THE DATA DISCLOSED HEREIN OR HEREWITH IS NOT TO BE REPRODUCED, USED OR DISCLOSED IN WHOLE OR IN PART TO ANYONE WITHOUT THE PERMISSION OF VICOR CORP.

REV.	DESCRIPTION	INTL	DATE	APVD
01	DRAWN FOR DEVELOPMENT REVISED FROM 36132 REV 1	REJH	03/28/11	DF

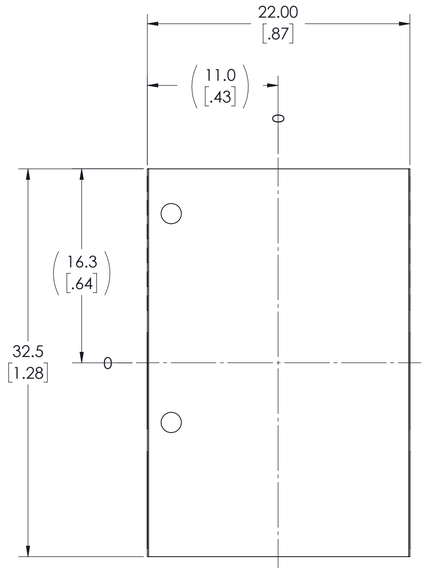

TOP VIEW (COMPONENT SIDE)

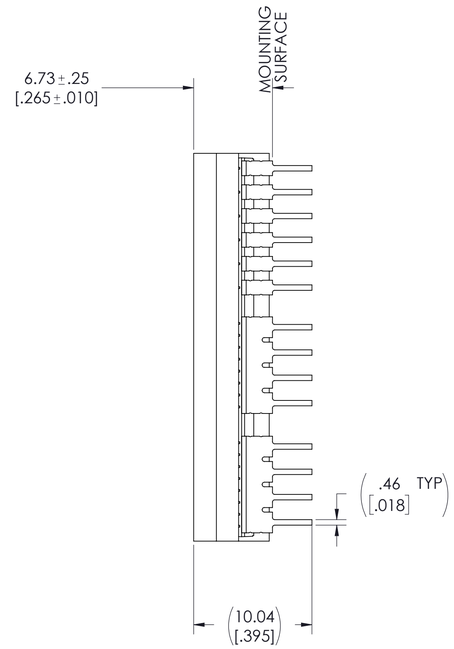

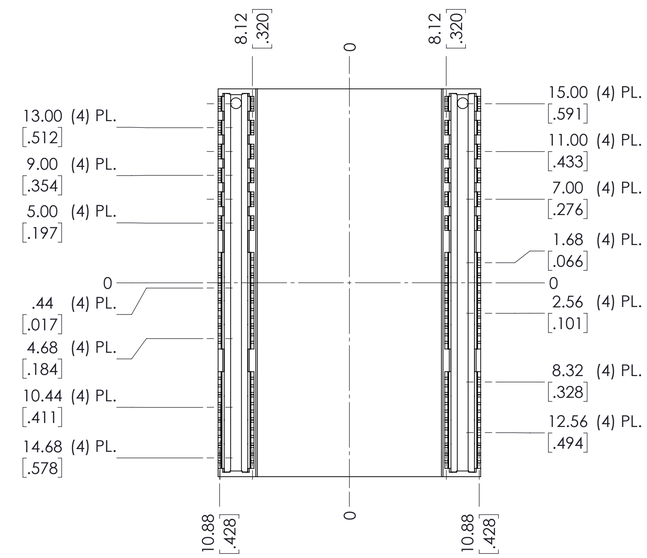

BOTTOM VIEW

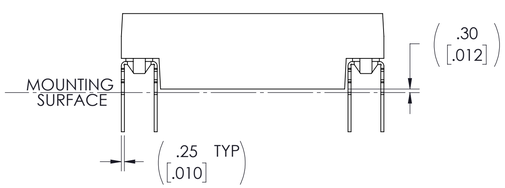

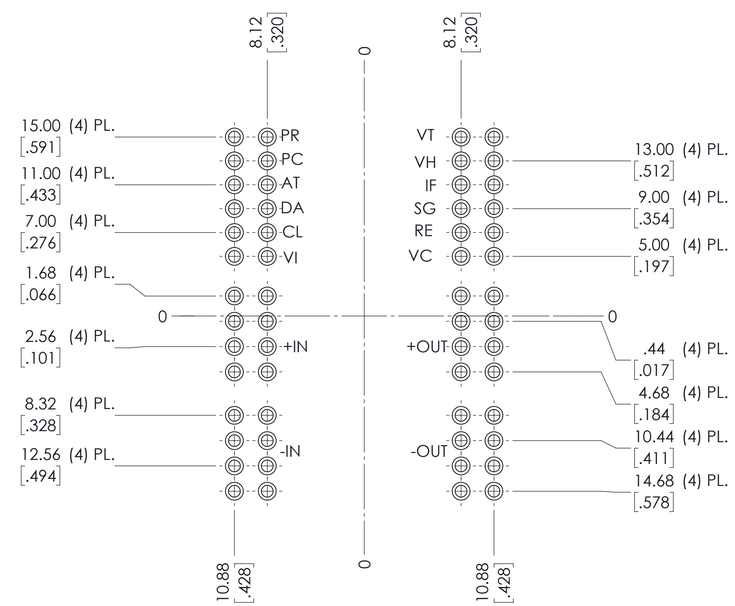

RECOMMENDED LAND PATTERN
(COMPONENT SIDE SHOWN)

NOTE:
1. RoHS COMPLIANT PER CST-0001 LATEST REVISION.

DRAWN BY	DATE
	06/30/2026

UNLESS OTHERWISE SPECIFIED DIMENSIONS ARE MM /[INCH]
TOLERANCES ARE:
DECIMALS X.XX [X.XX] = ±0.25 [0.01] ANGLES ±1°
X.XXX [X.XXX] = ±0.127 [0.005]

THIRD ANGLE PROJECTION

DO NOT SCALE DRAWING

VICOR SWD

PRODUCT OUTLINE DWG, PRM
CONF W/TH-LEADS PKG3

SIZE	CAGE CODE	DWG NO	REV
D	67131	37459	01

SCALE 4:1 SHEET 1 OF 1