VICOR CONFIDENTIAL

THIS DOCUMENT AND THE DATA DISCLOSED HEREIN OR HEREWITH IS NOT TO BE REPRODUCED, USED OR DISCLOSED IN WHOLE OR IN PART TO ANYONE WITHOUT THE PERMISSION OF VICOR CORP.

REV.	DESCRIPTION		DATE	APPROVED
1	RELEASED PER E120943	GCK	10/22/12	REJH
2	REVISED PER E130143	GCK	02/01/13	REJH

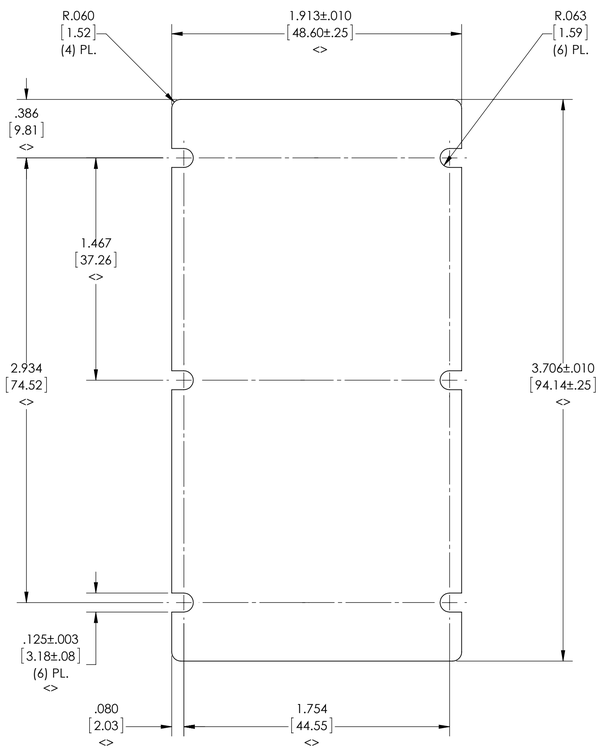

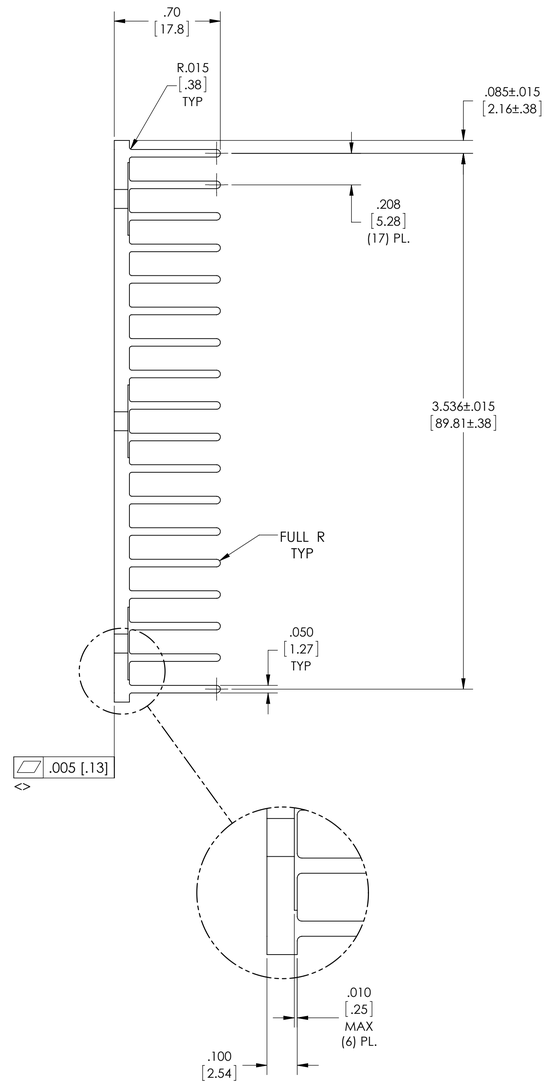

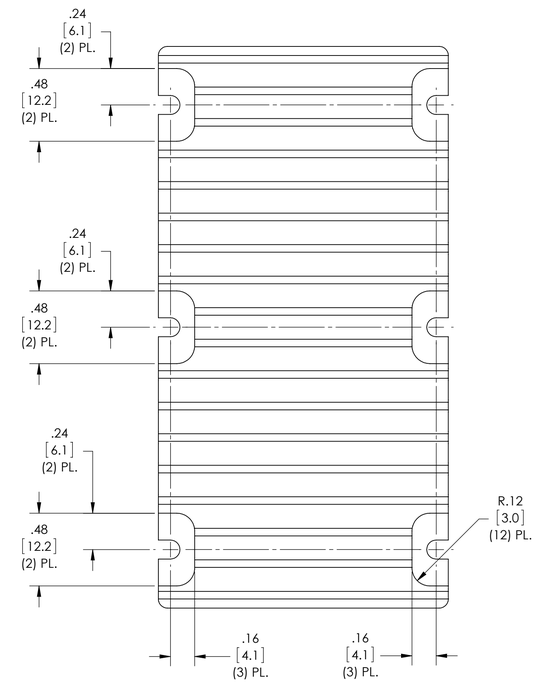

NOTES:

1- MATL: ALUMINUM 6063-T5.

2- CORNERS SHOWN SHARP TO BE .005/[.13] MAX.

<> 3- CLEAR FINISH, RoHS COMPLIANT PER CST-0001, LATEST REVISION PER
A.) CHROMIUM FREE, OR
B.) TRIVALENT CHROMIUM IN ACCORDANCE WITH MIL-DTL-5541, TYPE II, CLASS 1A OR 3.
SEE CST-0003 FOR TYPES OF AVAILABLE FINISHES.

4- ALL DIMENSIONS APPLY AFTER PLATING.

5- <> DENOTES CRITICAL CHARACTERISTIC FOR LOT INSPECTION.

6- MAXIMUM STEP BETWEEN ADJOINING CUTTER PASSES TO BE .0005/[.013]

7- BASE PLATE SURFACE PREPARATION PRIOR TO CLEAR FINISH IN ACCORDANCE WITH WS-0016.

8- REMOVE ALL BURRS AND SHARPE EDGES.

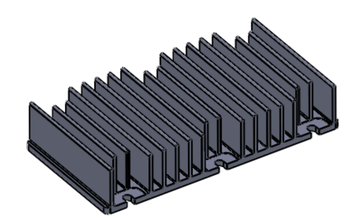

DRAWN BY	DATE
Gary Keay	09/26/2012

UNLESS OTHERWISE SPECIFIED DIMENSIONS ARE : INCH / [MM]
TOLERANCES ARE:
DECIMALS: X.XX [X.X] = ±0.01 [0.25]
X.XXX [X.XX] = ±0.005 [0.127]
ANGLES: ±1°

THIRD ANGLE PROJECTION

DO NOT SCALE DRAWING

VICOR SWD

HEATSINK VIBrick X-FLOW .70

SIZE	CAGE CODE	DWG NO	REV
D	67131	39069	2

SCALE 2:1 SHEET 1 OF 1