VICOR CONFIDENTIAL

THIS DOCUMENT AND THE DATA DISCLOSED HEREIN OR HEREWITH IS NOT TO BE REPRODUCED, USED OR DISCLOSED IN WHOLE OR IN PART TO ANYONE WITHOUT THE PERMISSION OF VICOR CORP.

REV.	DESCRIPTION	INTL	DATE	APVD
1	RELEASED PER E140954a	SJW	10/30/14	RH

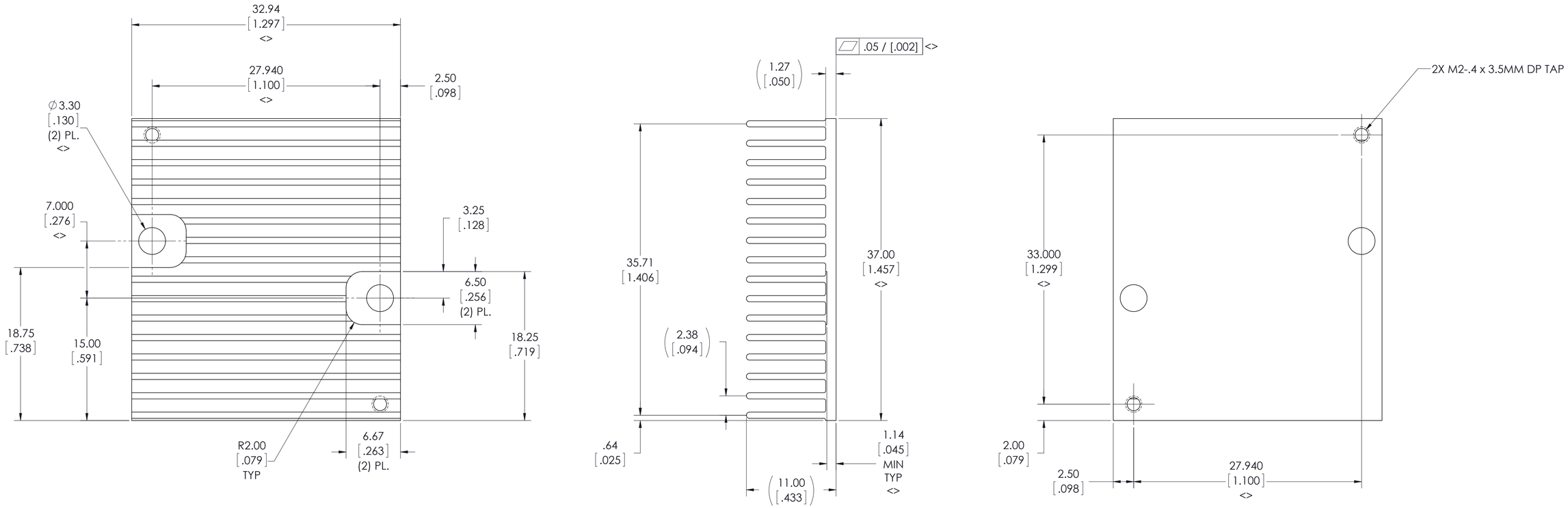

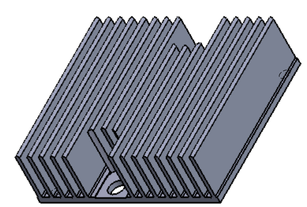

NOTES:

1- MAKE FROM VICOR P/N 30827.

2- FINISH: CLEAR FINISH, RoHS COMPLIANT PER CST-0001, LATEST REVISION PER
A.) CHROMIUM FREE, OR
B.) TRIVALENT CHROMIUM IN ACCORDANCE WITH MIL-DTL-5541, TYPE II, CLASS 1A OR 3. SEE CST-0003 FOR TYPES OF AVAILABLE FINISHES.

3- REMOVE ALL BURRS AND SHARP EDGES.

4- <> DENOTES CRITICAL CHARACTERISTIC FOR LOT INSPECTION.

5- ROHS COMPLIANT, LEAD FREE PER CST-0001 LATEST REVISION.

DRAWN BY	DATE	VICOR	SWD
Chris Stewart	04/04/2013		

UNLESS OTHERWISE SPECIFIED DIMENSIONS ARE MM [INCH]
TOLERANCES ARE:
DECIMALS X.XX [X.X] = ±0.25 [0.01] ANGLES ±1°
X.XXX [X.XX] = ±0.127 [0.005]

THIRD ANGLE PROJECTION

DO NOT SCALE DRAWING

HEATSINK, PUSH PIN, XF, 3623, 11MM

SIZE	CAGE CODE	DWG NO	REV
D	67131	39824	1

SCALE 4:1 SHEET 1 OF 1