VICOR CONFIDENTIAL
THIS DOCUMENT AND THE DATA DISCLOSED HEREIN OR HEREWITH IS NOT TO BE REPRODUCED, USED OR DISCLOSED IN WHOLE OR IN PART TO ANYONE WITHOUT THE PERMISSION OF VICOR CORP.

REV.	DESCRIPTION	INTL	DATE	APVD
1	RELEASED PER E140954a	SJW	10/30/14	RH

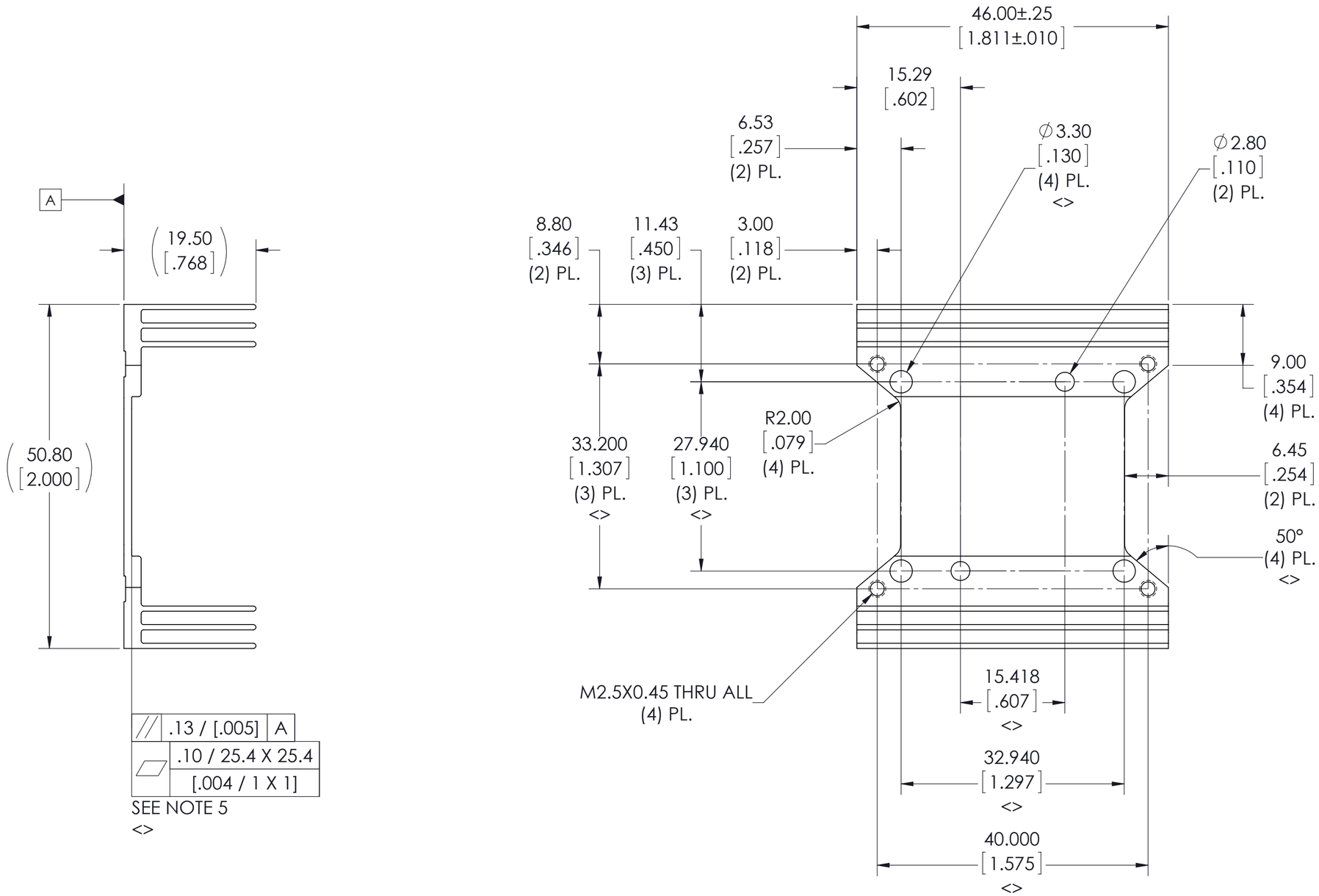

NOTES:

1. CLEAR FINISH, RoHS COMPLIANT PER CST-0001, LATEST REVISION PER A.) CHROMIUM FREE, OR B.) TRIVALENT CHROMIUM IN ACCORDANCE WITH MIL-DTL-5541, TYPE II, CLASS 1A OR 3. SEE CST-0003 FOR TYPES OF AVAILABLE FINISHES.
2. SEE VICOR P/N 40510 FOR EXTRUSION PROFILE.
3. MATERIAL: ALUM ALLOY 6063-T5
4. REMOVE ALL BURRS AND BREAK ALL SHARP EDGES.
5. IF NECESSARY, EXTRUDE OVERSIZE AND MACHINE BASE AND INSIDE SURFACE TO ACHIEVE FLATNESS AND PARALLELISM.
6. <> DENOTES CRITICAL CHARACTERISTIC FOR LOT INSPECTION.

DRAWN BY	DATE
Chris Stewart	6/7/2013

UNLESS OTHERWISE SPECIFIED DIMENSIONS ARE MM /[INCH]

TOLERANCES ARE:
DECIMALS X.XX [X.X] = ±0.25 [0.01] X.XXX [X.XX] = ±0.127 [0.005]
ANGLES ±1°

THIRD ANGLE PROJECTION

DO NOT SCALE DRAWING

VICOR

SWD

HEATSINK, BOTTOM, 4623 CHIP, FOR 11MM TOP-SIDE HEATSINK

SIZE	CAGE CODE	DWG NO	REV
C	67131	40098	1

SCALE 2:1 SHEET 1 OF 1