VICOR CONFIDENTIAL

THIS DOCUMENT AND THE DATA DISCLOSED HEREIN OR HEREWITH IS NOT TO BE REPRODUCED, USED OR DISCLOSED IN WHOLE OR IN PART TO ANYONE WITHOUT THE PERMISSION OF VICOR CORP.

REV.	DESCRIPTION	INTL	DATE	APVD
1	RELEASE PER E140060	REJH	01/17/14	REW
2	REVISED PER E140151	SR	01/30/2014	REW
3	REVISED PER E141039	SJW	09/03/14	RH
4	REVISED PER E170887	JM	09/26/17	REJH
5	REVISED PER E200529	DKT	10/19/20	RLT

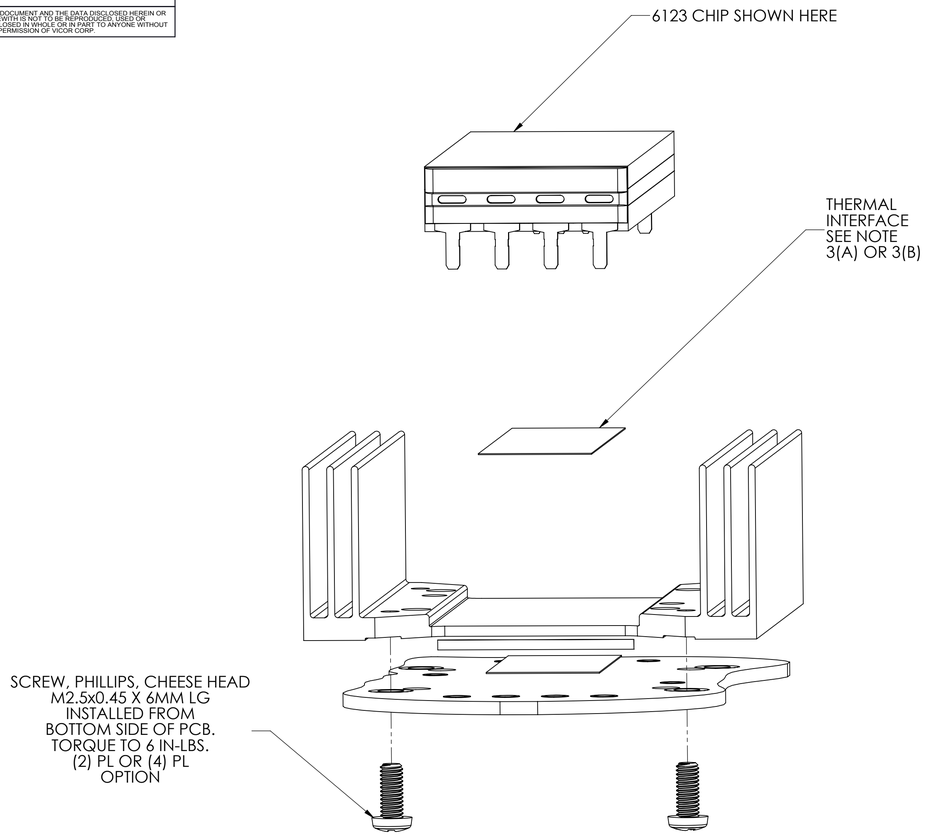

BOTTOM HEATSINK APPLICATION SEE NOTE 3

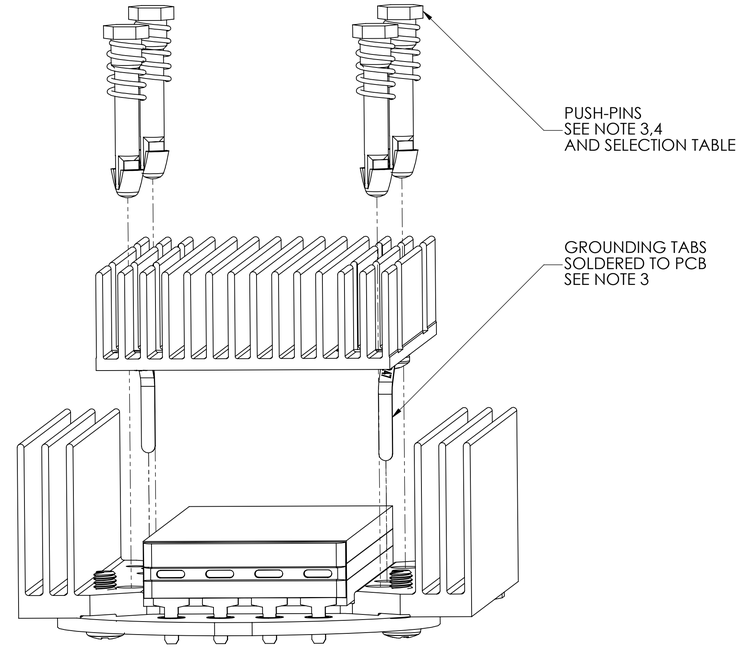

TOP HEATSINK APPLICATION SEE NOTES 3

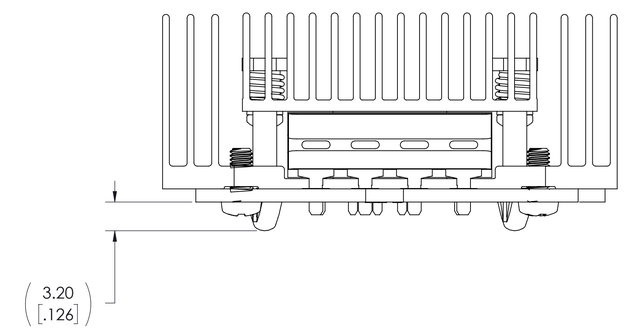

ASSEMBLED FRONT VIEW

NOTES:

1. FOR PCB LAYOUT SEE VICOR APPLICATION DRAWING 40438.
2. ROHS COMPLIANT PER CST-0001 LATEST REVISION.
3. THE SOLDERING METHOD USED FOR CHIPS (AND OPTIONAL HEATSINK GROUNDING) IS IMPORTANT WHEN SELECTING A THERMAL INTERFACE MATERIAL (TIM). THE PHASE-CHANGE TIM SHOWN IN THESE ILLUSTRATIONS MAY BE DAMAGED BY TEMPERATURES OVER 125C, SO TWO ASSEMBLY PROCEDURES ARE DESCRIBED BELOW:
   (A) FOR HAND-SOLDERING ONLY,
   (B) FOR WAVE-SOLDERING AND/OR HAND-SOLDERING.

   (A) PLACE BOTTOM-SIDE HEATSINK (WITH PRE-ATTACHED PHASE-CHANGE TIM) ON PCB.
   PLACE CHIP AND TOP-SIDE HEATSINK (WITH PRE-ATTACHED TIM AND GROUNDING TABS).
   WHILE SUPPORTING PCB, INSERT PLASTIC PUSH-PINS THROUGH BOTH HEATSINKS AND PCB.
   (SELECT PROPER PUSH-PIN LENGTH FROM TABLE ON THIS DRAWING.)
   IMPORTANT: TO SET FINAL THICKNESS OF PHASE-CHANGE TIM ENSURE THAT THE ENTIRE ASSEMBLY IS RAISED ABOVE 65C FOR SEVERAL MINUTES.
   HAND-SOLDER ALL CHIP AND GROUNDING PINS. ADDITIONAL SOLDERING IRON HEAT MAY BE REQUIRED TO COMPENSATE FOR LOSSES TO THE HEATSINKS.

   (B) WAVE SOLDERING TEMPERATURES ARE UNSUITABLE FOR PLASTIC PUSH-PINS AND PHASE-CHANGE TIM, SO PARKER CHOMERICS GEL8010 IS RECOMMENDED AS A TIM.
   APPLY A UNIFORM .003" (.076MM) LAYER OF TIM TO THE TOP AND BOTTOM SURFACE OF THE CHIP, OR TO THE CORRESPONDING HEATSINK SURFACES.
   PLACE BOTTOM-SIDE HEATSINK, CHIP, AND TOP-SIDE HEATSINK ON PCB.
   WITH A CUSTOM FIXTURE APPLY APPROX. 10 LBS
   LOAD TO THE TOP-SIDE HEATSINK AND THEN WAVE-SOLDER ALL PINS.
   REMOVE FIXTURE AND INSERT PLASTIC PUSH-PINS THROUGH BOTH HEATSINKS AND PCB.
   (SELECT PROPER PUSH-PIN LENGTH FROM TABLE ON THIS DRAWING.)
4. CARE SHOULD BE TAKEN TO AVOID FULLY COMPRESSING THE PUSH-PIN SPRING DURING INSTALLATION AS THIS WOULD EXPOSE THE CHIP TO FORCES GREATER THAN THE RECOMMENDED LIMIT OF 3.1 LBF (13.8 N) PER PUSH-PIN.

	HEATSINK TYPE	P/N ASSY HEATSINKS, TIM AND GROUND TAB	P/N ASSY HEATSINK W/GROUND TAB ONLY
SOLDERING METHOD (SEE NOTE 2)	-	2(A) HAND SOLDER ONLY	2(B) WITH VICOR 40325 THERMAL GEL
4623	DUAL 11MM	40519	40527
	DUAL 19MM	40408	-
6123	DUAL 11MM	40520	40528
	DUAL 19MM	40409	-

HEATSINK OPTIONS

PUSH-PINS W/ SPRINGS (100/BAG)	COLOR	PCB THK NOMINAL RANGE	PCB THK MINIMUM	PCB THK MAXIMUM
32436	BLUE	1.143 MM TO 1.854 MM [.045"] TO [.073"]	1.041 MM [.041"]	2.057 MM [.081"]
32437	GRAY	1.880 MM TO 2.438 MM [.074"] TO [.096"]	1.676 MM [.066"]	2.692 MM [.106"]

PUSH-PIN SELECTION

DRAWN BY	DATE	VICOR SWD
Robert Wasik	7/12/2013	**APP DWG, DUAL HEATSINK, 6123, 4623**

UNLESS OTHERWISE SPECIFIED DIMENSIONS ARE : INCH / [MM]
TOLERANCES ARE:
DECIMALS: X.XX [X.X] = ±0.01 [0.25]; X.XXX [X.XX] = ±0.005 [0.127]; ANGLES ±1°
THIRD ANGLE PROJECTION
DO NOT SCALE DRAWING

SIZE	CAGE CODE	DWG NO	REV
D	67131	40191	5

SCALE 3:1 | SHEET 1 OF 1