VICOR CONFIDENTIAL
THIS DOCUMENT AND THE DATA DISCLOSED HEREIN OR HEREWITH IS NOT TO BE REPRODUCED, USED OR DISCLOSED IN WHOLE OR IN PART TO ANYONE WITHOUT THE PERMISSION OF VICOR CORP.

REV.	DESCRIPTION	INTL	DATE	APVD
1	Released per ECO E141368	ESD	01/19/2015	RH

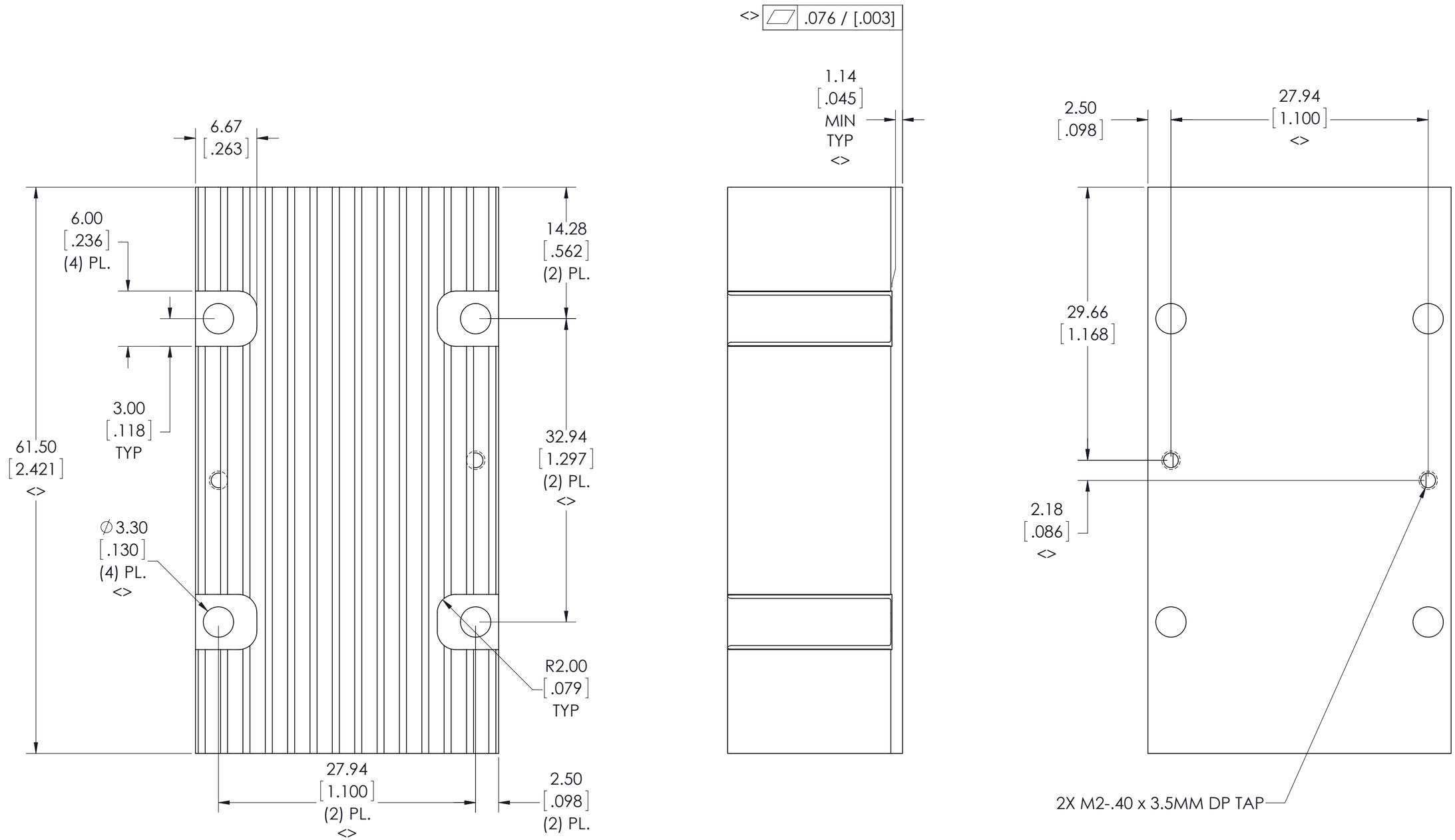

NOTES:

1. CLEAR FINISH, RoHS COMPLIANT PER CST-0001, LATEST REVISION PER A.) CHROMIUM FREE, OR B.) TRIVALENT CHROMIUM IN ACCORDANCE WITH MIL-DTL-5541, TYPE II, CLASS 1A OR 3. SEE CST-0003 FOR TYPES OF AVAILABLE FINISHES.
2. SEE DRAWING 40540 FOR EXTRUSION PROFILE.
3. MATERIAL: ALUM ALLOY 6061-T6
4. REMOVE ALL BURRS AND BREAK ALL SHARP EDGES.

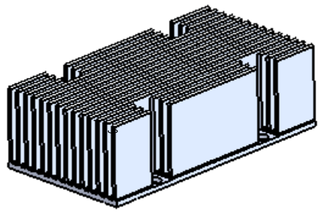

DRAWN BY	DATE
Robert Wasik	9/12/2013

UNLESS OTHERWISE SPECIFIED DIMENSIONS ARE MM /[INCH]
TOLERANCES ARE:
DECIMALS X.XX [X.X] = ±0.25 [0.01] X.XXX [X.XX] = ±0.127 [0.005]
ANGLES ±1°

THIRD ANGLE PROJECTION

DO NOT SCALE DRAWING

VICOR SWD

HEATSINK, PUSH PIN, TOP, LF, 6123, 19MM

SIZE	CAGE CODE	DWG NO	REV
C	67131	40263	1

SCALE 3:1 SHEET 1 OF 1