VICOR CONFIDENTIAL

THIS DOCUMENT AND THE DATA DISCLOSED HEREIN OR HEREWITH IS NOT TO BE REPRODUCED, USED OR DISCLOSED IN WHOLE OR IN PART TO ANYONE WITHOUT THE PERMISSION OF VICOR CORP.

REV.	DESCRIPTION	INTL	DATE	APVD
1	RELEASE PER E170634b	REJH	07/06/17	JM

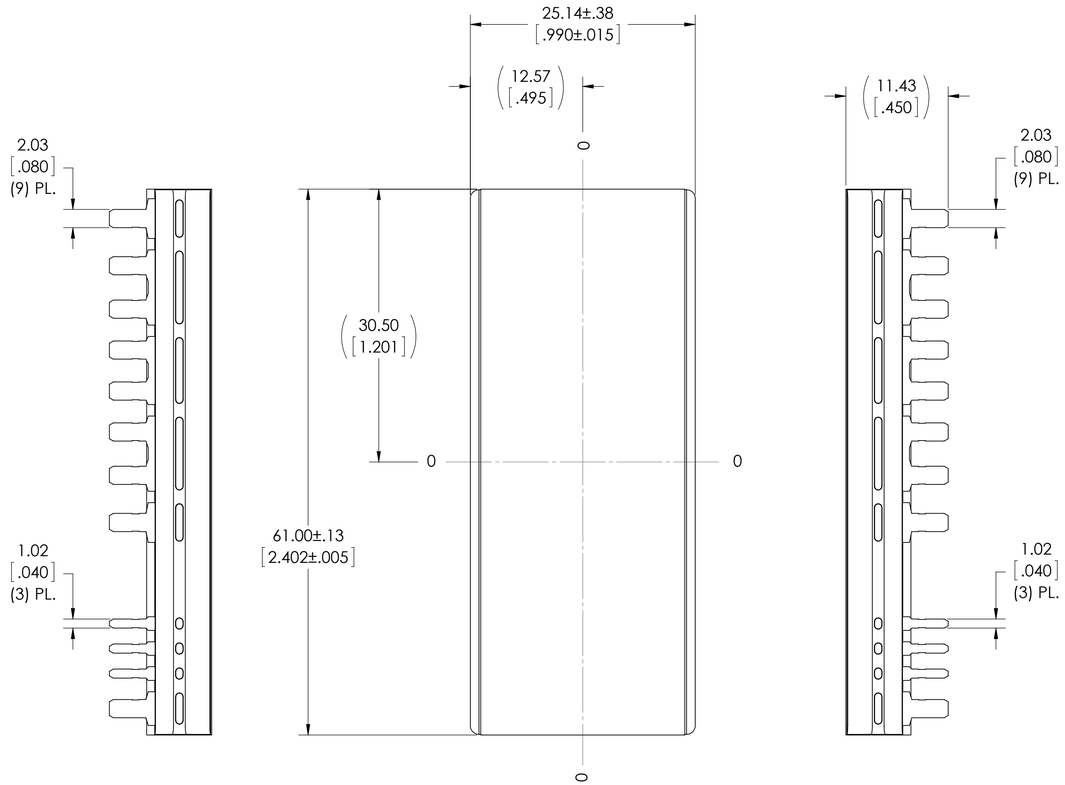

TOP VIEW (COMPONENT SIDE)

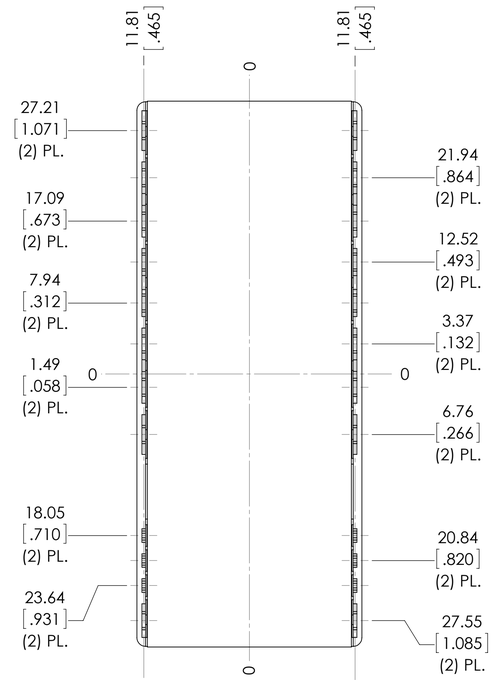

BOTTOM VIEW

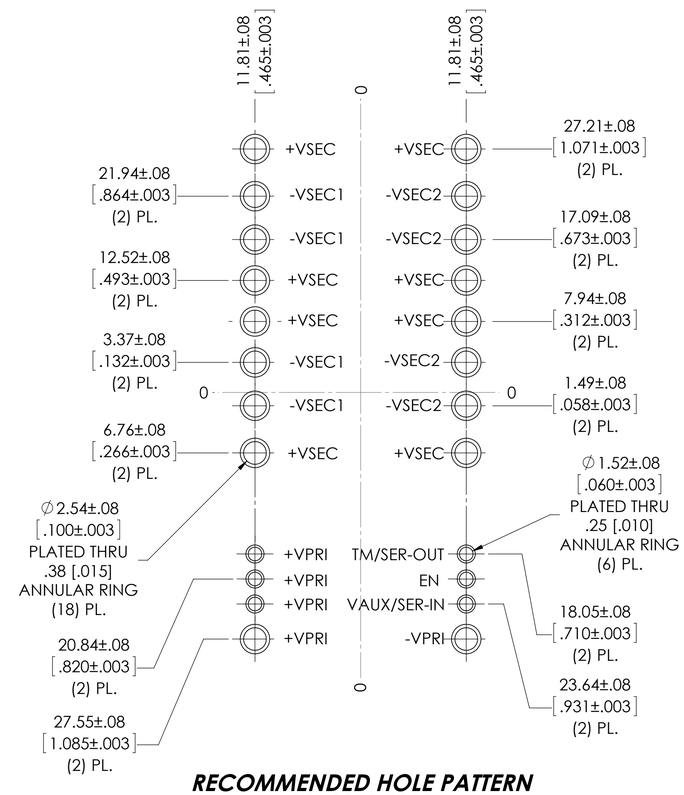

RECOMMENDED HOLE PATTERN
(COMPONENT SIDE)

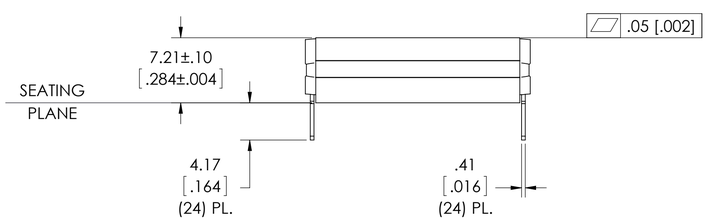

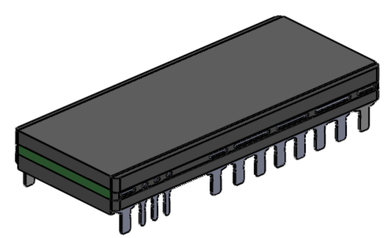

NOTES:

1- RoHS COMPLIANT PER CST-0001 LATEST REVISION.

DRAWN BY	DATE
R.E.J. Hickey	10/22/2013

UNLESS OTHERWISE SPECIFIED DIMENSIONS ARE : MM / [INCH]
TOLERANCES ARE:
DECIMALS: X.X [X.XX] = ±0.25 [0.01]
X.XX [X.XXX] = ±0.127 [0.005]
ANGLES ±1°

THIRD ANGLE PROJECTION

DO NOT SCALE DRAWING

VICOR SWD

PRODUCT OUTLINE 2361 BCM THRU HOLE

SIZE	CAGE CODE	DWG NO	REV
D	67131	40282	1

SCALE 3:1 SHEET 1 OF 1