VICOR CONFIDENTIAL

THIS DOCUMENT AND THE DATA DISCLOSED HEREIN OR HEREWITH IS NOT TO BE REPRODUCED, USED OR DISCLOSED IN WHOLE OR IN PART TO ANYONE WITHOUT THE PERMISSION OF VICOR CORP.

REV.	DESCRIPTION	INTL	DATE	APVD
1	RELEASED PER E150811	GCK	08/04/15	SE
2	REVISED PER E161035B	AP	10/26/16	BH
3	REVISED PER E180036	US	01/24/18	DHK
4	REVISED PER E180513	REJH	07/25/18	GCK
5	REVISED PER E190425	KS	08/22/19	RLT

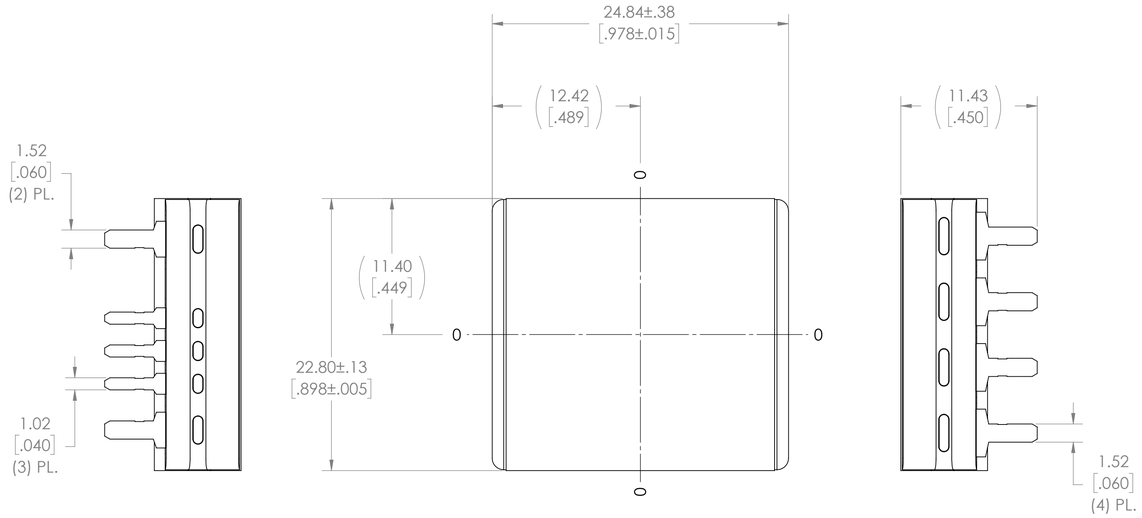

TOP VIEW (COMPONENT SIDE)

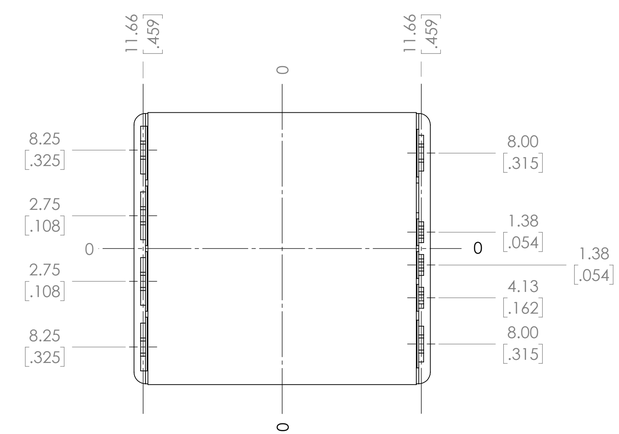

BOTTOM VIEW

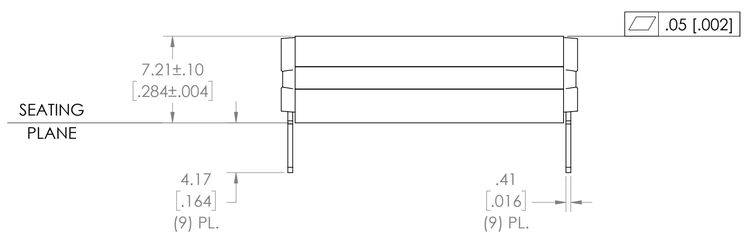

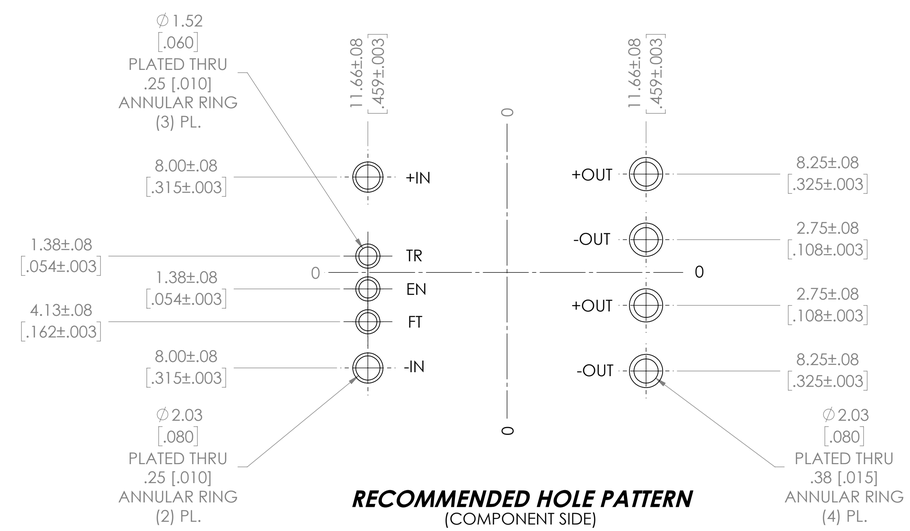

RECOMMENDED HOLE PATTERN
(COMPONENT SIDE)

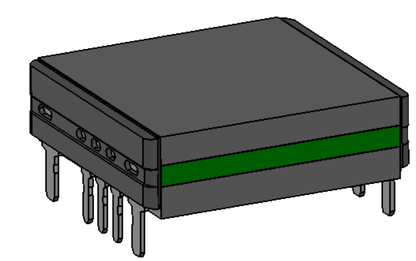

NOTES:

1- RoHS COMPLIANT PER CST-0001 LATEST REVISION.

DRAWN BY	DATE
R.E.J. Hickey	9/16/2013

UNLESS OTHERWISE SPECIFIED DIMENSIONS ARE MM [INCH]
TOLERANCES ARE:
DECIMALS: X.XX [X.X] = ±0.25 [0.01] ANGLES ±1°
X.XXX [X.XX] = ±0.127 [0.005]

THIRD ANGLE PROJECTION

DO NOT SCALE DRAWING

VICOR SWD

PRODUCT OUTLINE 2322 THRU HOLE

SIZE	CAGE CODE	DWG NO	REV
D	67131	40292	5

SCALE 4:1 SHEET 1 OF 1