VICOR CONFIDENTIAL
THIS DOCUMENT AND THE DATA DISCLOSED HEREIN OR HEREWITH IS NOT TO BE REPRODUCED, USED OR DISCLOSED IN WHOLE OR IN PART TO ANYONE WITHOUT THE PERMISSION OF VICOR CORP.

REV.	DESCRIPTION	INTL	DATE	APVD
1	RELEASED PER E151315b	GCK	12/21/15	YZ
2	REVISED PER E171079	JM	12/12/17	REJH
3	REVISED PER E180139	REJH	02/18/18	DK

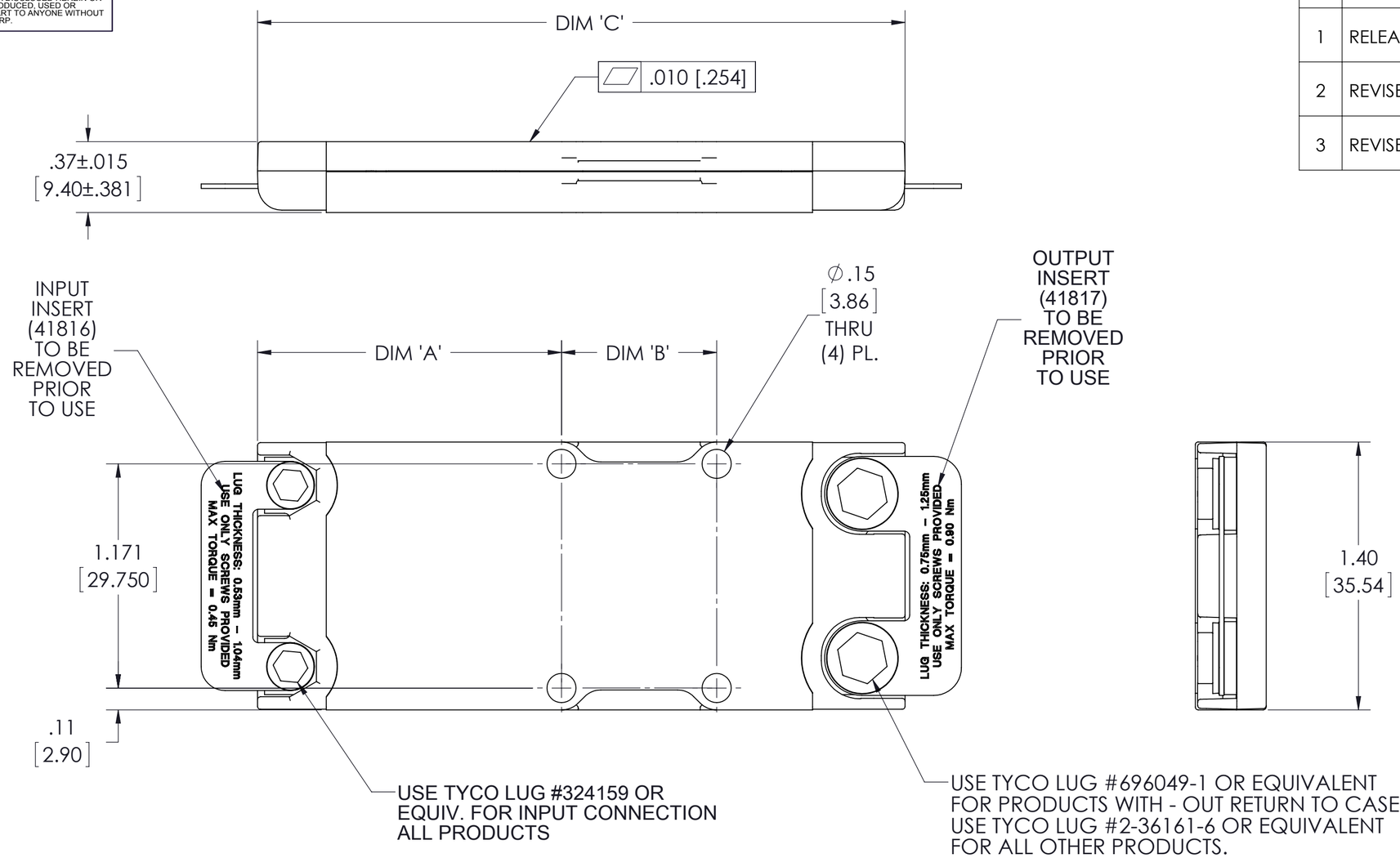

PRODUCT	DIM 'A'	DIM 'B'	DIM 'C'
3414 DCM	1.61 [40.93]	.788 [20.005]	3.38 [85.93]
3714 DCM	1.61 [40.93]	1.150 [29.200]	3.75 [95.13]
3814 NBM - OUT RETURN TO CASE	1.02 [25.96]	1.277 [32.430]	3.76 [95.59]
3814 BCM - OUT RETURN TO CASE	1.02 [25.96]	1.277 [32.430]	3.76 [95.59]
4414 BCM	1.61 [40.93]	1.757 [44.625]	4.35 [110.55]
4414 BCM - OUT RETURN TO CASE	1.61 [40.93]	1.277 [32.430]	4.35 [110.55]
4414 PFM	1.61 [40.93]	1.757 [44.625]	4.35 [110.55]

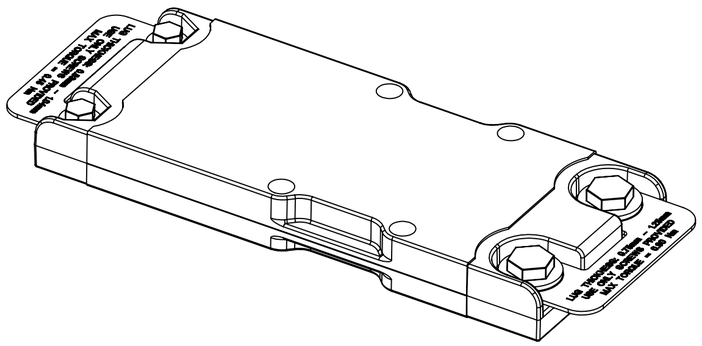

NOTES:
1- RoHS COMPLIANT PER CST-0001 LATEST REVISION.
2- SEE PRODUCT DATA SHEET FOR PIN DESIGNATIONS.

DRAWN BY	DATE
R.E.J. Hickey	7/27/2015

UNLESS OTHERWISE SPECIFIED DIMENSIONS ARE : INCH / [MM]
TOLERANCES ARE:
DECIMALS X.XX [X.XX] = ±0.01 [0.25]
X.XXX [X.XXX] = ±0.005 [0.127]
ANGLES ±1°

THIRD ANGLE PROJECTION
DO NOT SCALE DRAWING

VICOR SWD

PROD OUTL, VIA, CHASSIS MNT, W/O COMM.

SIZE	CAGE CODE	DWG NO	REV
C	67131	42691	3

SCALE 2:1 SHEET 1 OF 1