VICOR CONFIDENTIAL

THIS DOCUMENT AND THE DATA DISCLOSED HEREIN OR HEREWITH IS NOT TO BE REPRODUCED, USED OR DISCLOSED IN WHOLE OR IN PART TO ANYONE WITHOUT THE PERMISSION OF VICOR CORP.

REV.	DESCRIPTION	INTL	DATE	APVD
1	RELEASE PER ECO E151379c	MTB	01/06/2016	MG
2	REVISED PER E171079	JM	12/12/17	REJH
3	REVISED PER E180134	REJH	02/18/18	DK
4	REVISED PER E180356	US	05/14/18	REJH

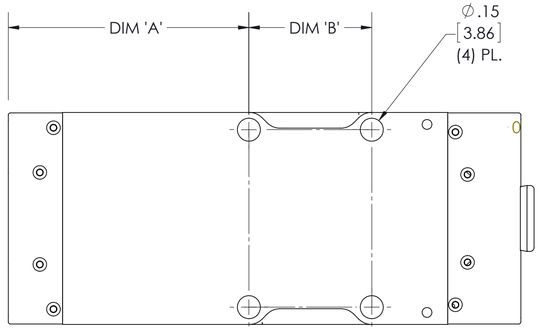

TOP VIEW
(COMPONENT SIDE)

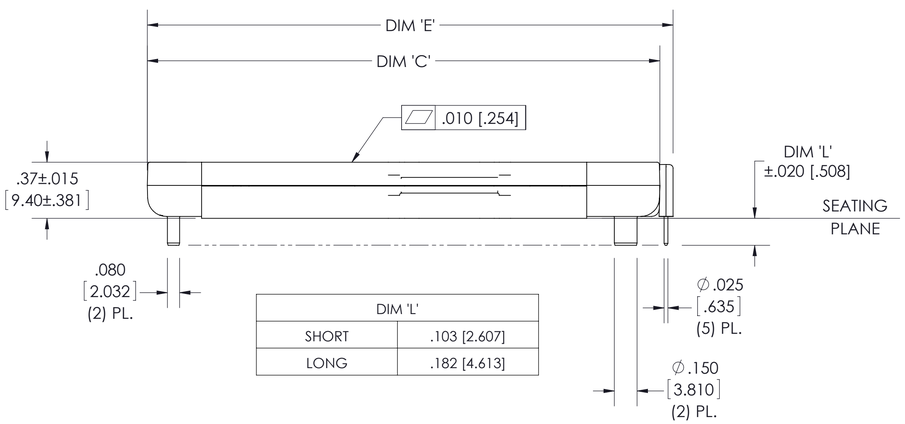

DIM 'L'	
SHORT	.103 [2.607]
LONG	.182 [4.613]

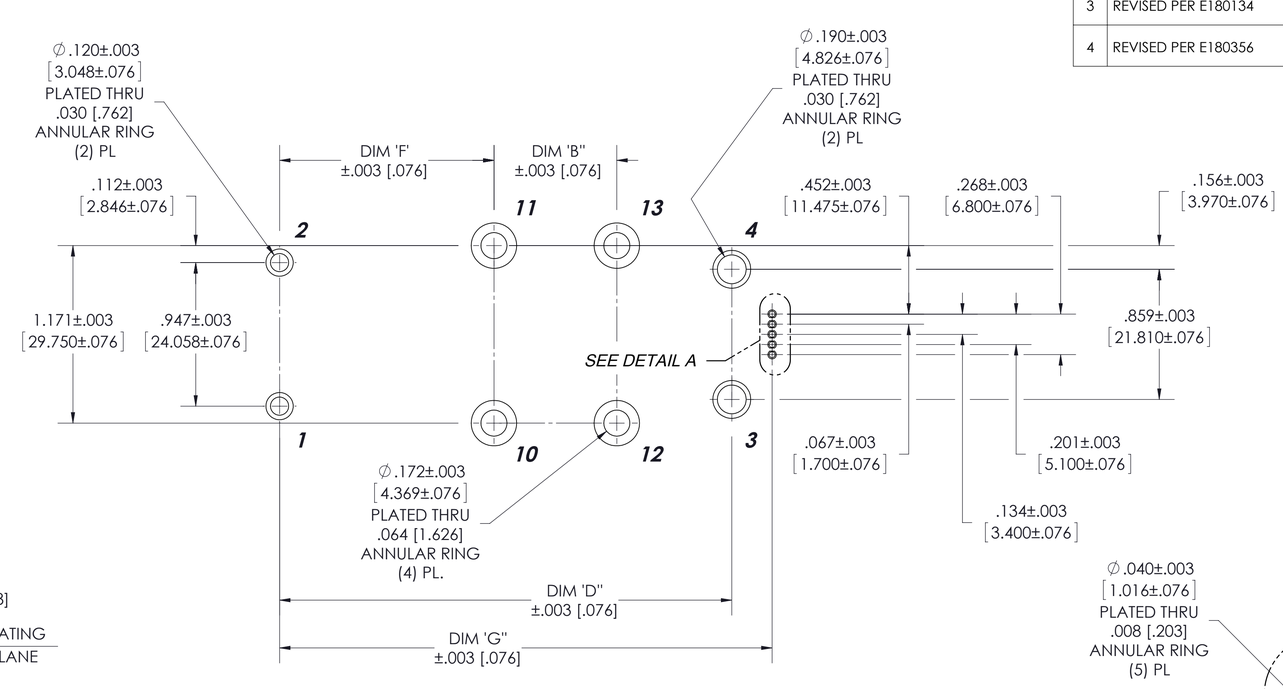

RECOMMENDED HOLE PATTERN
(COMPONENT SIDE)

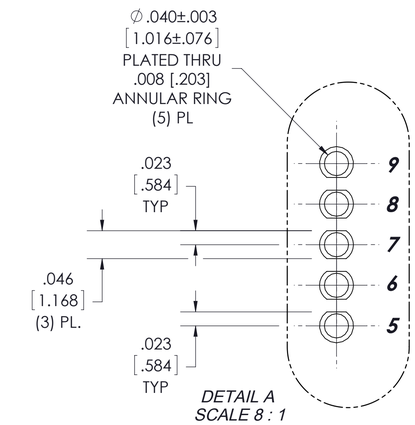

DETAIL A
SCALE 8 : 1

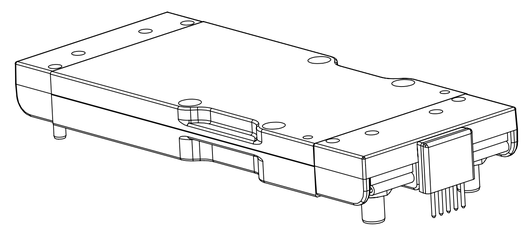

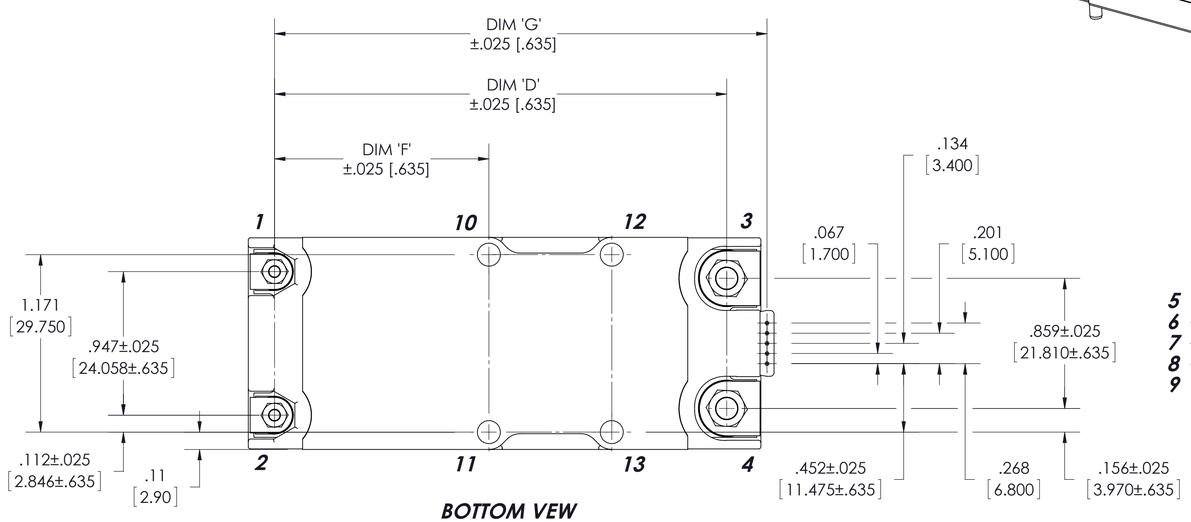

BOTTOM VEW

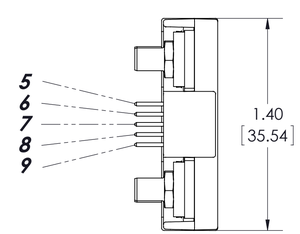

PRODUCT	DIM 'A'	DIM 'B'	DIM 'C'	DIM 'D'	DIM 'E'	DIM 'F'	DIM 'G'
3414 DCM	1.61 [40.93]	.788 [20.005]	3.38 [85.93]	2.988 [75.897]	3.47 [88.14]	1.439 [36.554]	3.251 [82.586]
3714 DCM	1.61 [40.93]	1.150 [29.200]	3.75 [95.13	3.350 [85.092]	3.83 [97.34]	1.439 [36.554]	3.613 [91.781]
4414 BCM	1.61 [40.93]	1.757 [44.625]	4.35 [110.55]	3.957 [100.517]	4.44 [112.76]	1.439 [36.554]	4.221 [107.206]
4414 PFM	1.61 [40.93]	1.757 [44.625]	4.35 [110.55]	3.957 [100.517]	4.44 [112.76]	1.439 [36.554]	4.221 [107.206]

NOTES:

1- RoHS COMPLIANT PER CST-0001 LATEST REVISION.

2- SEE PRODUCT DATA SHEET FOR PIN DESIGNATIONS.

DRAWN BY	DATE
R.E.J. Hickey	7/27/2015

UNLESS OTHERWISE SPECIFIED DIMENSIONS ARE : INCH / [MM]
TOLERANCES ARE:
DECIMALS: X.XX [X.XX] = ±0.01 [0.25]
X.XXX [X.XXX] = ±0.005 [0.127]
ANGLES ±1°

THIRD ANGLE PROJECTION

DO NOT SCALE DRAWING

VICOR SWD

PROD OUTL, VIA, PCB MNT, W/COMM.

SIZE	CAGE CODE	DWG NO	REV
D	67131	42693	4

SCALE 2:1 SHEET 1 OF 1