VICOR CONFIDENTIAL

THIS DOCUMENT AND THE DATA DISCLOSED HEREIN OR HEREWITH IS NOT TO BE REPRODUCED, USED OR DISCLOSED IN WHOLE OR IN PART TO ANYONE WITHOUT THE PERMISSION OF VICOR CORP.

REV.	DESCRIPTION	INTL	DATE	APVD
#3	.37 [9.40] WAS .37 [9.30]	REJH	11/11/15	REJH
#4	UPDATED CHART AND PIN TOL	REJH	12/04/17	REJH
#5	UPDATED PIN LOCATION TOL	REJH	05/08/18	REJH
06	UPDATE TO SAP REVS	REW	07/27/26	REW

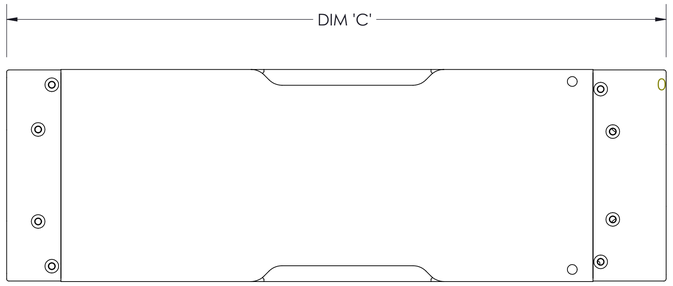

TOP VIEW
(COMPONENT SIDE)

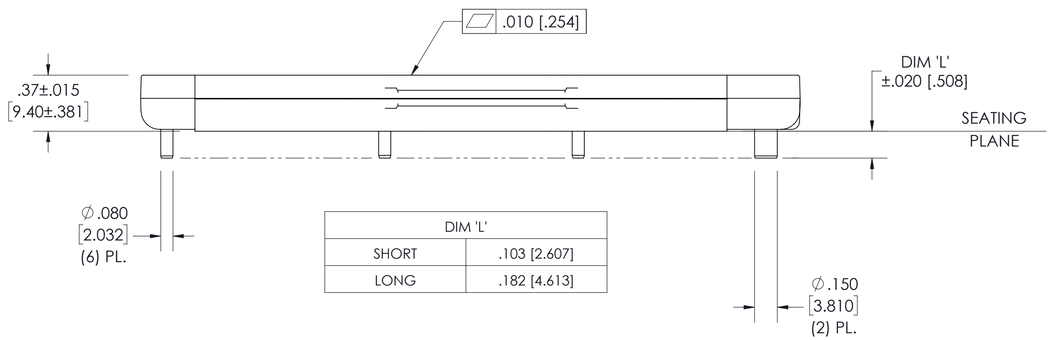

DIM 'L'	
SHORT	.103 [2.607]
LONG	.182 [4.613]

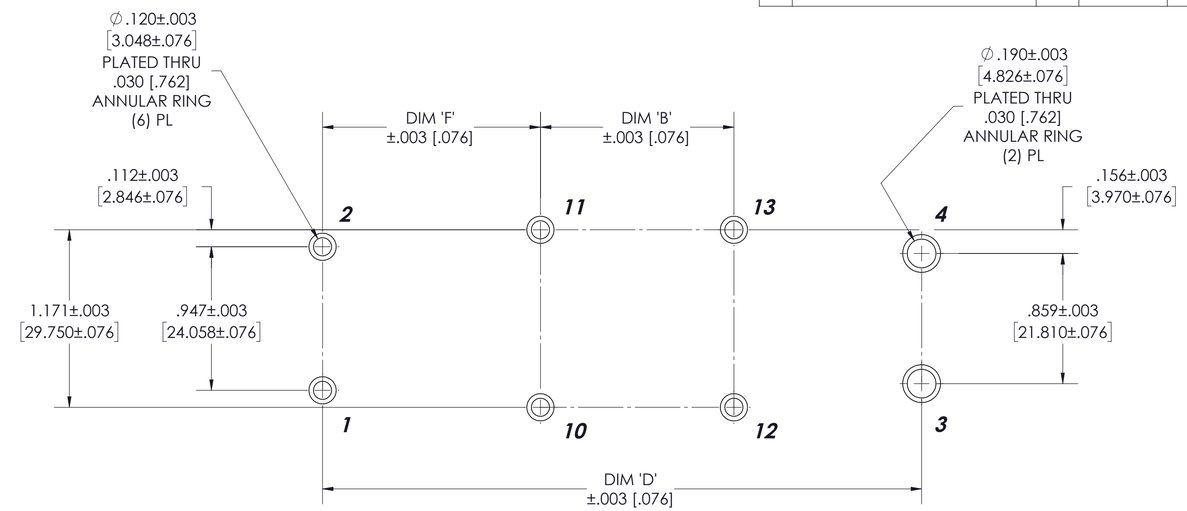

RECOMMENDED HOLE PATTERN
(COMPONENT SIDE)

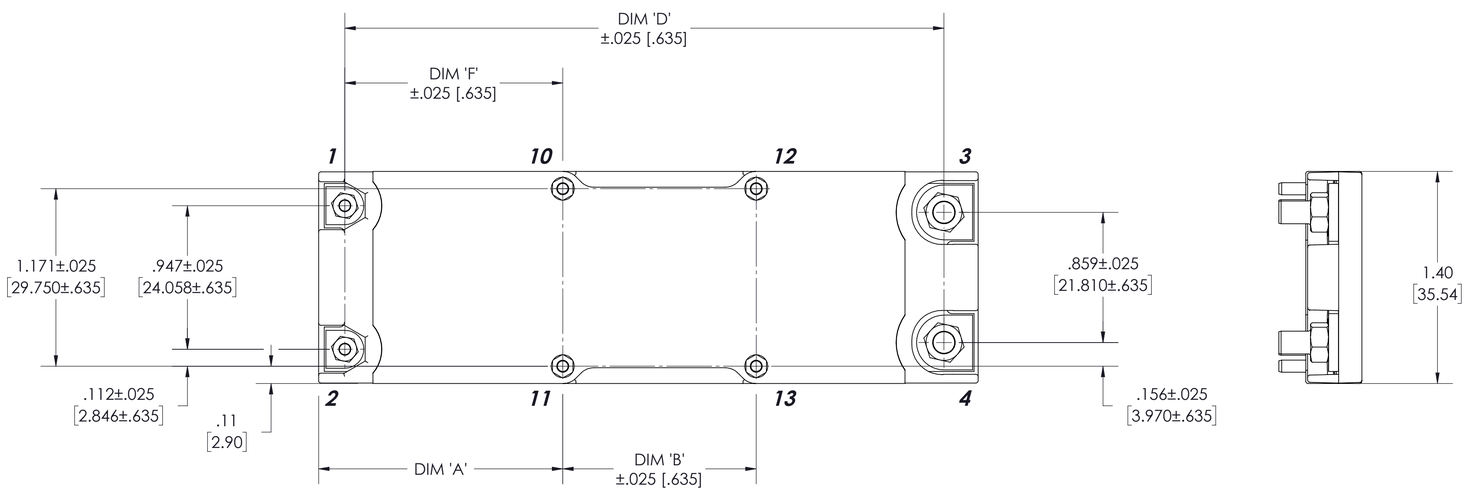

BOTTOM VEW

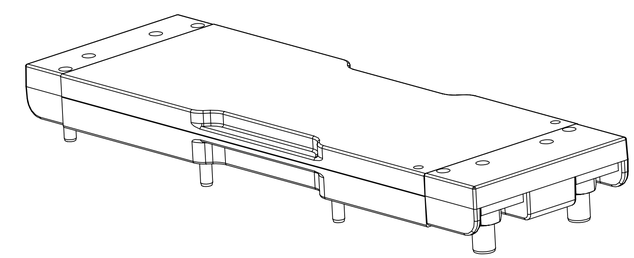

PRODUCT	DIM 'A'	DIM 'B'	DIM 'C'	DIM 'D'	DIM 'F'
3814 NBM - OUT RETURN TO CASE	1.02 [25.96]	1.277 [32.430]	3.76 [95.59]	3.368 [85.554]	.850 [21.590]
3814 BCM - OUT RETURN TO CASE	1.02 [25.96]	1.277 [32.430]	3.76 [95.59]	3.368 [85.554]	.850 [21.590]
4414 BCM - OUT RETURN TO CASE	1.61 [40.93]	1.277 [32.430]	4.35 [110.55]	3.957 [100.517]	1.439 [36.554]

NOTES:

1- RoHS COMPLIANT PER CST-0001 LATEST REVISION.

2- SEE PRODUCT DATA SHEET FOR PIN DESIGNATIONS.

DRAWN BY	DATE
R.E.J. Hickey	08/03/2015

UNLESS OTHERWISE SPECIFIED DIMENSIONS ARE : INCH / [MM]
TOLERANCES ARE:
DECIMALS X.XX [X.XX] = ±0.01 [0.25]
X.XXX [X.XXX] = ±0.005 [0.127]
ANGLES ±1°

THIRD ANGLE PROJECTION

DO NOT SCALE DRAWING

VICOR SWD

PROD OUTL, VIA, PCB MNT, W/O COMM. (SSC)

SIZE	CAGE CODE	DWG NO	REV
D	67131	42699	06

SCALE 2:1 SHEET 1 OF 1