VICOR CONFIDENTIAL

THIS DOCUMENT AND THE DATA DISCLOSED HEREIN OR HEREWITH IS NOT TO BE REPRODUCED, USED OR DISCLOSED IN WHOLE OR IN PART TO ANYONE WITHOUT THE PERMISSION OF VICOR CORP.

REV.	DESCRIPTION	INTL	DATE	APVD
1	RELEASE PER E160097	MTB	02/04/16	AM
2	REVISE PER E160549	GCK	06/07/16	MTB
3	REVISE PER E180621	REJH	09/06/18	AM

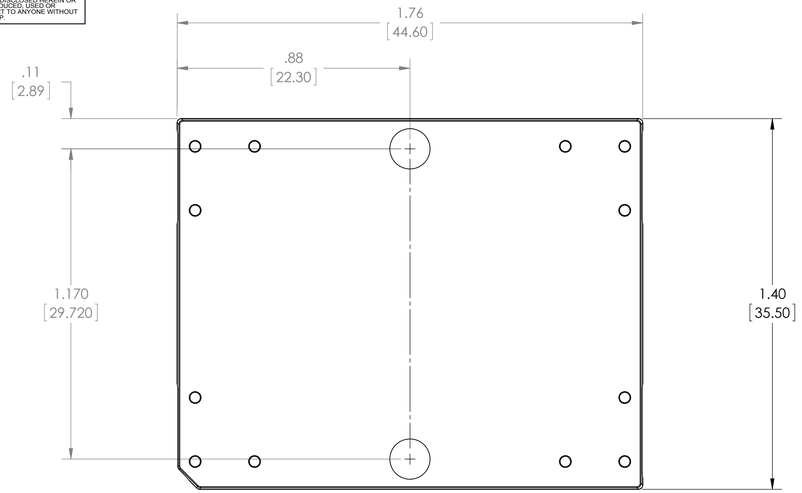

TOP VIEW
(COMPONENT SIDE)

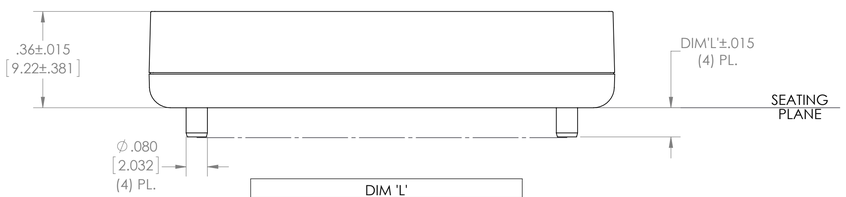

DIM 'L'	
SHORT	.113 [2.870]
LONG	.192 [4.877]

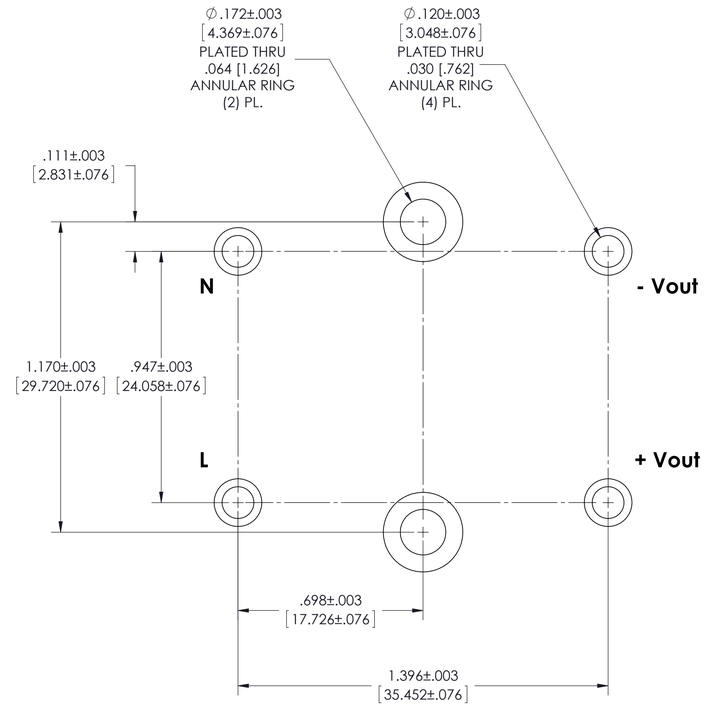

RECOMMENDED HOLE PATTERN
(COMPONENT SIDE)

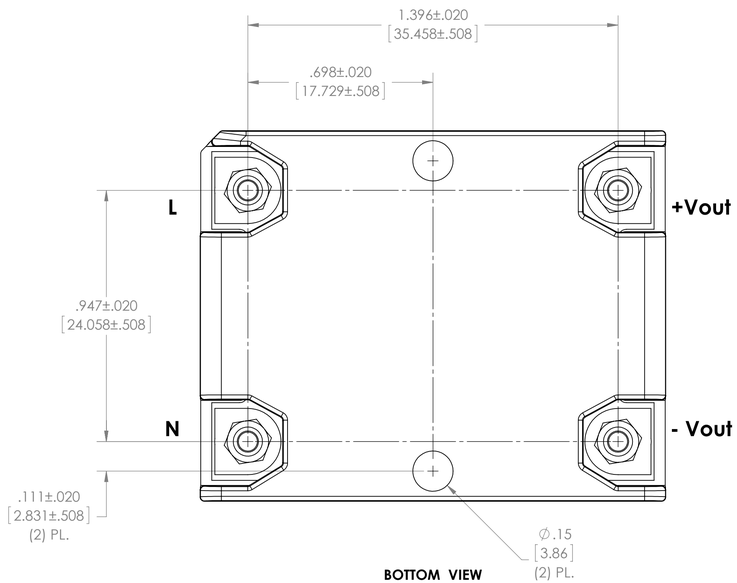

BOTTOM VIEW

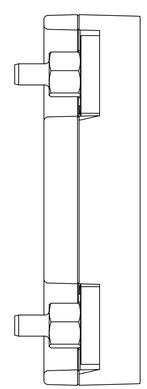

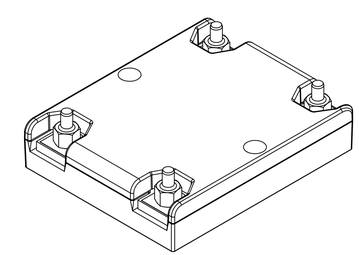

NOTES:
1. RoHS COMPLIANT PER CST-0001 LATEST REVISION.

DRAWN BY	DATE
Jackson Flynn	9/1/2015

UNLESS OTHERWISE SPECIFIED DIMENSIONS ARE : INCH / [MM]
TOLERANCES ARE:
DECIMALS: X.XX [X.XX] = ±0.01 [0.25]
X.XXX [X.XXX] = ±0.005 [0.127]
ANGLES: ±1°

THIRD ANGLE PROJECTION

DO NOT SCALE DRAWING

VICOR SWD

PROD OUTL PCB MNT VIA AIM

SIZE	CAGE CODE	DWG NO	REV
D	67131	42969	3

SCALE 3.5:1 | SHEET 1 OF 1