VICOR CONFIDENTIAL
THIS DOCUMENT AND THE DATA DISCLOSED HEREIN OR HEREWITH IS NOT TO BE REPRODUCED, USED OR DISCLOSED IN WHOLE OR IN PART TO ANYONE WITHOUT THE PERMISSION OF VICOR CORP.

| REV. | DESCRIPTION | INTL | DATE | APVD |
|---|---|---|---|---|
| 1 | RELEASE PER E161031b | GCK | 11/22/16 | RH |
| 2 | REVISED PER E170986 | REJH | 11/08/17 | JM |
| 3 | REVISED PER E180727 | CMY | 10/17/18 | RLT |

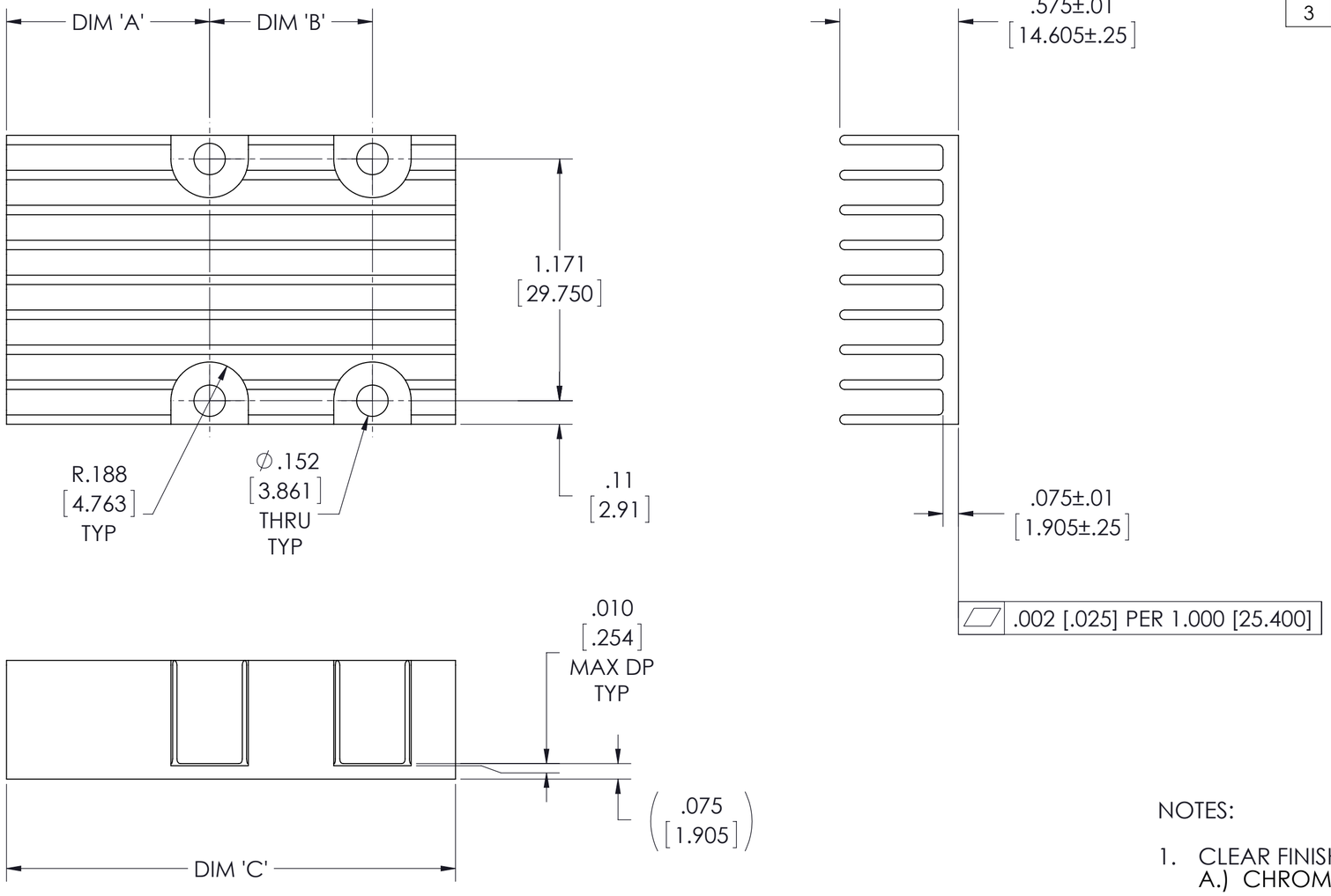


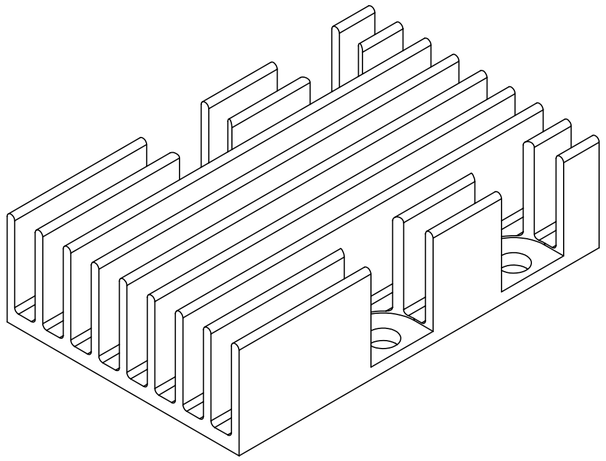

| BOM NUMBER | PRODUCT | DIM 'A' | DIM 'B' | DIM 'C' | SEE NOTE 5 |
|---|---|---|---|---|---|
| 43806-01 | 2214 (0 STAGE) 2223 | 0.57 [14.55] | N/A | 1.23 [31.16] | * |
| 43806-02 | 2814 (1 STAGE) 2223 | 0.95 [24.22] | N/A | 1.60 [40.69] | * |
| 43806-03 | 2814 (0 STAGE) 3623 | 0.57 [14.55] | 0.789 [20.033] | 1.77 [45.04] | |
| 43806-04 | 3414 (1 STAGE) 3623 | 0.98 [25.00] | 0.789 [20.033] | 2.18 [55.25] | |
| 43806-05 | 3714 (1 STAGE) 4623 | 0.98 [25.00] | 1.150 [29.200] | 2.55 [64.65] | |
| 43806-06 | 3814 (0 STAGE) 2361 | 0.39 [10.03] | 1.277 [32.430] | 2.56 [65.11] | * |
| 43806-07 | 3814 (0 STAGE) 2361 NBM | 0.39 [10.03] | 1.277 [32.430] | 2.56 [65.11] | * |
| 43806-08 | 4414 (1 STAGE) 2361 | 0.98 [25.00] | 1.277 [32.430] | 3.15 [80.07] | |
| 43806-09 | 4414 (1 STAGE) 6123 | 0.98 [25.00] | 1.757 [44.625] | 3.15 [80.07] | |
| 43806-10 | 4914 (2 STAGE) 6123 | 1.38 [34.95] | 1.757 [44.625] | 3.54 [89.88] | |
| 43806-11 | 5314 (0 STAGE) 2392 | 0.54 [13.84] | 2.490 [63.250] | 3.93 [99.77] | * |
| 43806-12 | 5314 (0 STAGE) 9223 | 0.54 [13.84] | 2.970 [75.445] | 3.93 [99.77] | |
| 43806-13 | 5614 (1 STAGE) 2392 | 0.98 [25.00] | 2.490 [63.250] | 4.24 [107.57] | |
| 43806-14 | 5614 (1 STAGE) 9223 | 0.98 [25.00] | 2.970 [75.445] | 4.24 [107.57] | |
| 43806-15 | 6114 (2 STAGE) 9223 | 1.54 [39.19] | 2.970 [75.445] | 4.93 [125.10] | |
| 43806-16 | 6114 (2 STAGE) 2392 | 1.54 [39.19] | 2.490 [63.250] | 4.93 [125.10] | |
| 43806-17 | 5814 (1 STAGE, EPO) 2392 | 1.17 [29.67] | 2.490 [63.250] | 4.55 [115.56] | |
| 43806-18 | 5814 (1 STAGE, EPO) 9223 | 1.17 [29.67] | 2.871 [72.930] | 4.55 [115.56] | |

NOTES:

1. CLEAR FINISH, RoHS COMPLIANT PER CST-0001, LATEST REVISION PER
   A.) CHROMIUM FREE, OR

   B.) TRIVALENT CHROMIUM IN ACCORDANCE WITH MIL-DTL-5541, TYPE II, CLASS 1A OR 3.
   SEE CST-0003 FOR TYPES OF AVAILABLE FINISHES.

2. SEE CHART FOR BOM NUMBERS
   SEE BOMS FOR PARTS LIST.

3. MATERIAL: MAKE FROM AAVID EXTRUSION P/N 66450 OR EQUIVALENT (VICOR P/N 42585)

4. REMOVE ALL BURRS AND SHARP EDGES.

5. -01 AND -02 PARTS HAVE ONLY ONE PAIR OF MOUNTING HOLES. SOME HEATSINKS FROM TABLE DO NOT LOOK LIKE THE SAMPLE ILLUSTRATION (WITH MORE DISTANCE ON THE LEFT SIDE OF THE MOUNTING HOLES). IN THESE CASES, THE "A" AND "B" DIMENSIONS SHOULD BE CORRECT AFTER SPINNING THE PART 180 DEGREES.

| DRAWN BY | DATE |
|---|---|
| Matthew Biron | 2/24/2016 |

UNLESS OTHERWISE SPECIFIED DIMENSIONS ARE : INCH / [MM]
TOLERANCES ARE:
DECIMALS X.XX [X.XX] = ±0.01 [0.25]
X.XXX [X.XXX] = ±0.005 [0.127]
ANGLES ±1°

THIRD ANGLE PROJECTION

DO NOT SCALE DRAWING

VICOR SWD

**DWG HEAT SINK LF .575 TALL ADAPTERS**

| SIZE | CAGE CODE | DWG NO | REV |
|---|---|---|---|
| C | 67131 | 43754 | 3 |

SCALE 2:1 SHEET 1 OF 1