VICOR CONFIDENTIAL
THIS DOCUMENT AND THE DATA DISCLOSED HEREIN OR HEREWITH IS NOT TO BE REPRODUCED, USED OR DISCLOSED IN WHOLE OR IN PART TO ANYONE WITHOUT THE PERMISSION OF VICOR CORP.

REV.	DESCRIPTION	INTL	DATE	APVD
1	RELEASE PER E161031b	GCK	11/22/16	RH
2	REVISED PER E170986	REJH	11/08/17	JM
3	REVISED PER E180142	GCK	02/25/18	REJH
4	REVISED PER E180260	US	04/10/18	RLT
5	REVISED PER E180727	CMY	10/17/18	RLT

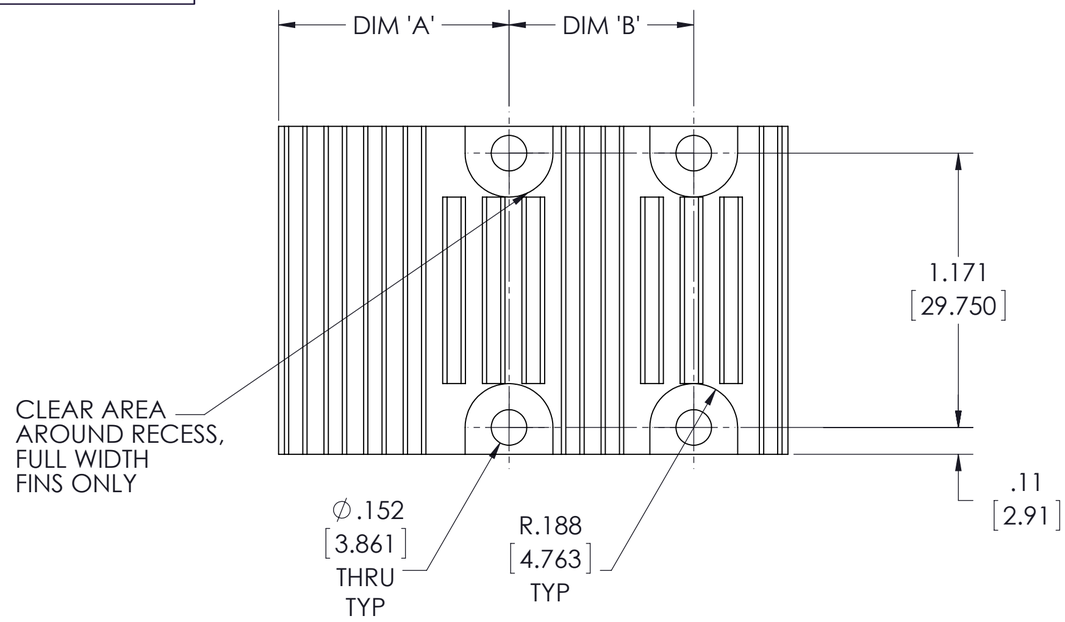

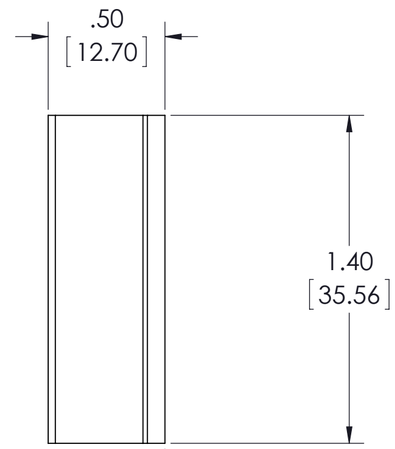

.002 [.025] PER 1.000 [25.400]

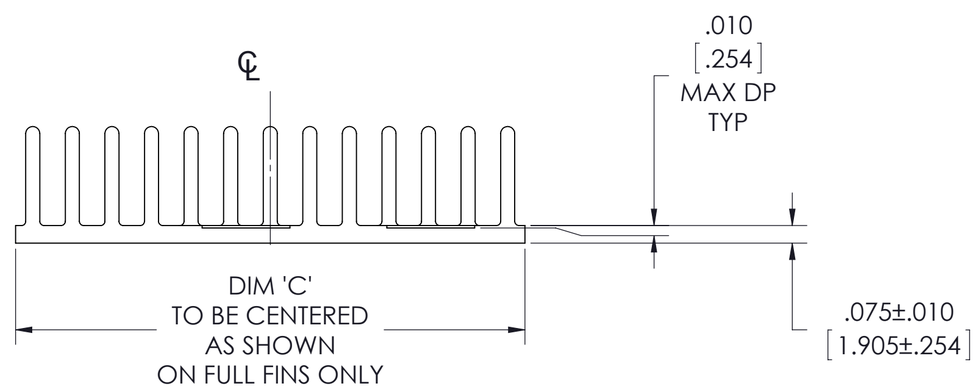

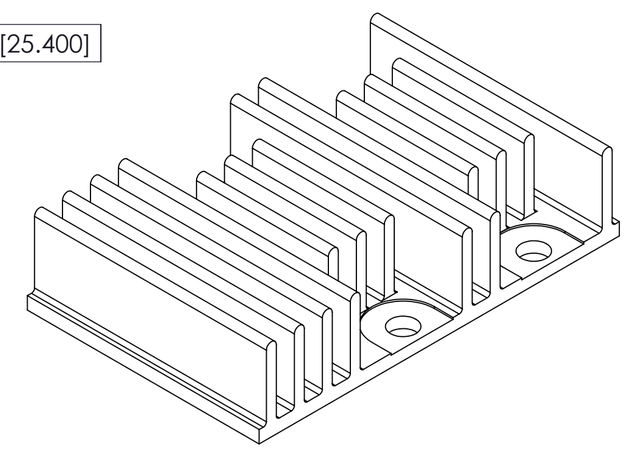

BOM NUMBER	PRODUCT	DIM 'A'	DIM 'B'	DIM 'C'	SEE NOTE 5
43809-01	2214 (0 STAGE) 2223	0.57 [14.55]	N/A	1.23 [31.16]	*
43809-02	2814 (1 STAGE) 2223	0.95 [24.22]	N/A	1.60 [40.69]	*
43809-03	2814 (0 STAGE) 3623	0.57 [14.55]	0.789 [20.033]	1.77 [45.04]	
43809-04	3414 (1 STAGE) 3623	0.98 [25.00]	0.789 [20.033]	2.18 [55.25]	
43809-05	3714 (1 STAGE) 4623	0.98 [25.00]	1.150 [29.200]	2.55 [64.65]	
43809-06	3814 (0 STAGE) 2361	0.39 [10.03]	1.277 [32.430]	2.56 [65.11]	*
43809-07	3814 (0 STAGE) 2361 NBM	0.39 [10.03]	1.277 [32.430]	2.56 [65.11]	*
43809-08	4414 (1 STAGE) 2361	0.98 [25.00]	1.277 [32.430]	3.15 [80.07]	
43809-09	4414 (1 STAGE) 6123	0.98 [25.00]	1.757 [44.625]	3.15 [80.07]	
43809-10	4914 (2 STAGE) 6123	1.38 [34.95]	1.757 [44.625]	3.54 [89.88]	
43809-11	5314 (0 STAGE) 2392	0.54 [13.84]	2.490 [63.250]	3.93 [99.77]	*
43809-12	5314 (0 STAGE) 9223	0.54 [13.84]	2.970 [75.445]	3.93 [99.77]	
43809-13	5614 (1 STAGE) 2392	0.98 [25.00]	2.490 [63.250]	4.24 [107.57]	
43809-14	5614 (1 STAGE) 9223	0.98 [25.00]	2.970 [75.445]	4.24 [107.57]	
43809-15	6114 (2 STAGE) 9223	1.54 [39.19]	2.970 [75.445]	4.93 [125.10]	
43809-16	6114 (2STAGE) 2392	1.54 [39.19]	2.490 [63.250]	4.93 [125.10]	
43809-17	5814 (1 STAGE, EPO) 2392	1.17 [29.67]	2.490 [63.250]	4.55 [115.56]	
43809-18	5814 (1 STAGE, EPO) 9223	1.17 [29.67]	2.871 [72.930]	4.55 [115.56]	

NOTES:

1. CLEAR FINISH, RoHS COMPLIANT PER CST-0001, LATEST REVISION PER
   A.) CHROMIUM FREE, OR

   B.) TRIVALENT CHROMIUM IN ACCORDANCE WITH MIL-DTL-5541, TYPE II, CLASS 1A OR 3. SEE CST-0003 FOR TYPES OF AVAILABLE FINISHES.

2. SEE CHART FOR BOM NUMBERS
   SEE BOMS FOR PARTS LIST.

3. MATERIAL: MAKE FROM AAVID EXTRUSION P/N 72085 (VICOR P/N 43812) OR VICOR P/N 46662

4. REMOVE ALL BURRS AND SHARP EDGES.

5. -01 AND -02 PARTS HAVE ONLY ONE PAIR OF MOUNTING HOLES. SOME HEATSINKS FROM TABLE DO NOT LOOK LIKE THE SAMPLE ILLUSTRATION (WITH MORE DISTANCE ON THE LEFT SIDE OF THE MOUNTING HOLES). IN THESE CASES, THE "A" AND "B" DIMENSIONS SHOULD BE CORRECT AFTER SPINNING THE PART 180 DEGREES

DRAWN BY	DATE
Matthew Biron	2/25/2016

UNLESS OTHERWISE SPECIFIED DIMENSIONS ARE : INCH / [MM]
TOLERANCES ARE:
DECIMALS X.XX [X.XX] = ±0.01 [0.25] X.XXX [X.XXX] = ±0.005 [0.127]
ANGLES ±1°

THIRD ANGLE PROJECTION
DO NOT SCALE DRAWING

VICOR SWD

DWG HEAT SINK XF .500 TALL ADAPTERS

SIZE	CAGE CODE	DWG NO	REV
C	67131	43810	5

SCALE 2:1 SHEET 1 OF 1