VICOR CONFIDENTIAL

THIS DOCUMENT AND THE DATA DISCLOSED HEREIN OR HEREWITH IS NOT TO BE REPRODUCED, USED OR DISCLOSED IN WHOLE OR IN PART TO ANYONE WITHOUT THE PERMISSION OF VICOR CORP.

REV.	DESCRIPTION	INTL	DATE	APVD
1	RELEASE PER E180464A	GCK	06/22/18	SC
2	REVISED PER E210068	CL	02/04/21	REJH

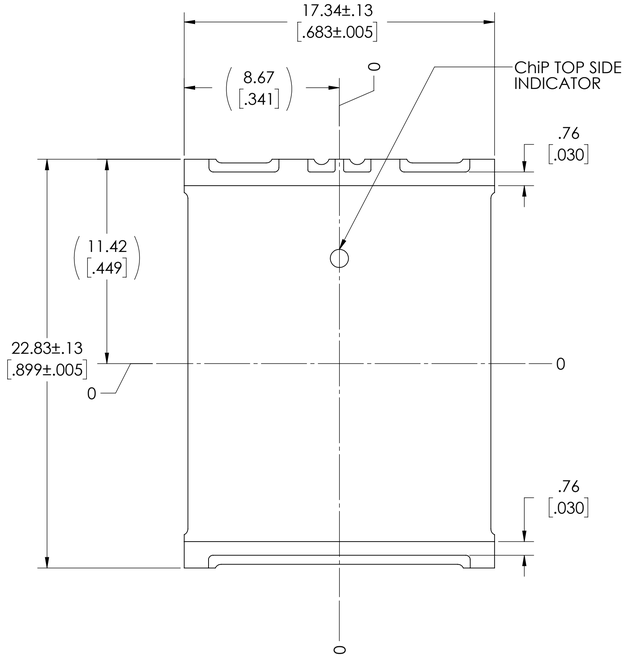

TOP VIEW(COMPONENT SIDE)

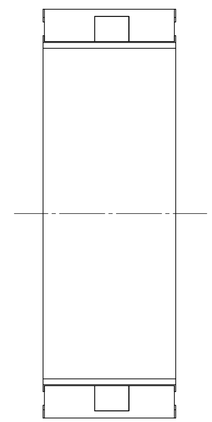

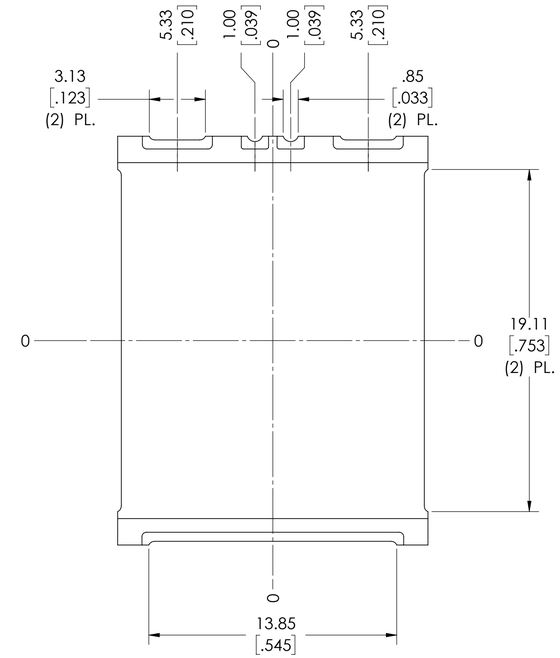

BOTTOM VIEW

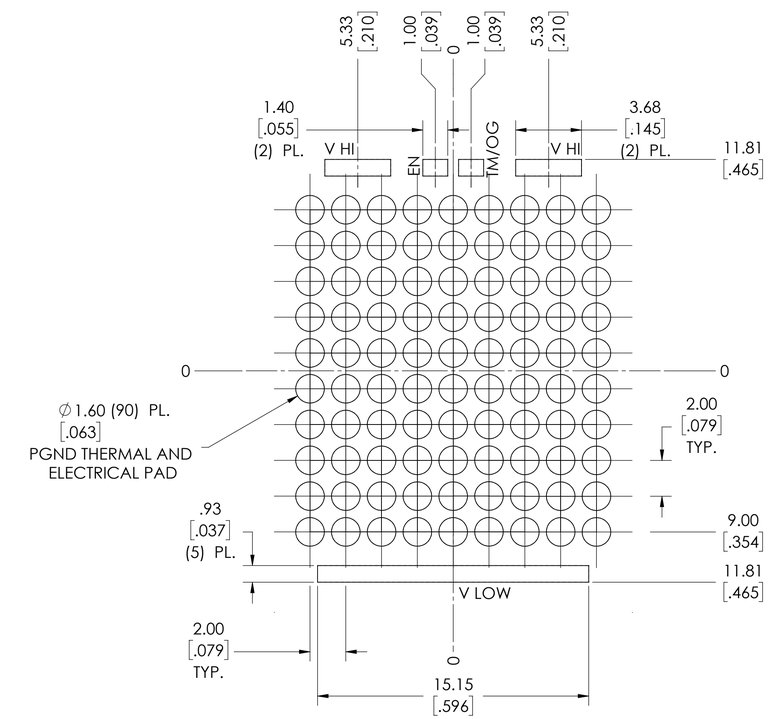

RECOMMENDED LAND PATTERN
2317 NBM TC3
(COMPONENT SIDE)

2317 NBM TC3

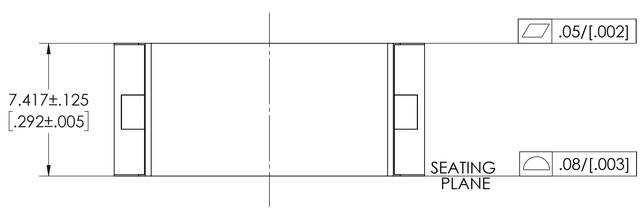

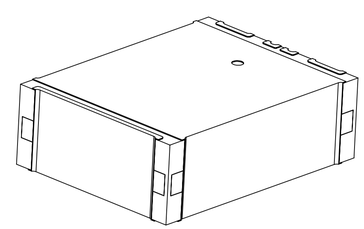

NOTES:
1. RoHS COMPLIANT, LEAD FREE PER CST-0001, LATEST REVISION

DRAWN BY	DATE
Mike Lafleur	4/15/2017

UNLESS OTHERWISE SPECIFIED DIMENSIONS ARE : MM / [INCH]
TOLERANCES ARE:
DECIMALS X.XX [X.XX] = ±0.25 [0.01]
X.XXX [X.XXX] = ±0.127 [0.005]
ANGLES ±1°

THIRD ANGLE PROJECTION

DO NOT SCALE DRAWING

VICOR SWD

PRODUCT OUTLINE SMChiP 2317 NBM TC3

SIZE	CAGE CODE	DWG NO	REV
D	67131	45810	2

SCALE 6:1 SHEET 1 OF 1