VICOR CONFIDENTIAL
THIS DOCUMENT AND THE DATA DISCLOSED HEREIN OR HEREWITH IS NOT TO BE REPRODUCED, USED OR DISCLOSED IN WHOLE OR IN PART TO ANYONE WITHOUT THE PERMISSION OF VICOR CORP.

REV.	DESCRIPTION	INTL	DATE	APVD
1	RELEASE PER E180556	REJH	08/02/18	RLT
2	REVISED PER E190345	KS	06/26/19	RLT

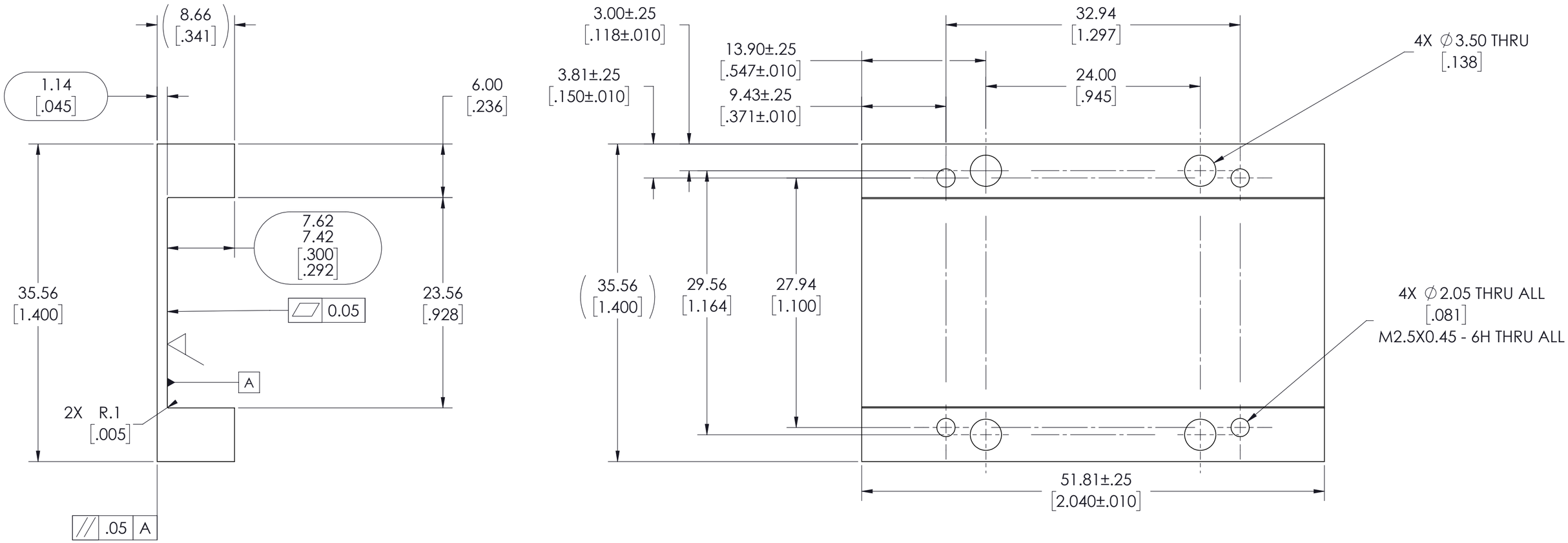

NOTES:
1. MATERIAL: 6063 - T5 ALUMINUM
2. CLEAR FINISH, RoHS COMPLIANT PER CST-0001, LATEST REVISION PER A.) CHROMIUM FREE, OR B.) TRIVALENT CHROMIUM IN ACCORDANCE WITH MIL-DTL-5541, TYPE II, CLASS 1A OR 3. SEE CST-0003 FOR TYPES OF AVAILABLE FINISHES.

DRAWN BY	DATE
Kali Simonds	6/26/2019

UNLESS OTHERWISE SPECIFIED DIMENSIONS ARE MM /[INCH]
TOLERANCES ARE:
DECIMALS X.XX [X.X] = ±0.25 [0.01] X.XXX [X.XX] = ±0.127 [0.005]
ANGLES ±1°

THIRD ANGLE PROJECTION
DO NOT SCALE DRAWING

VICOR SWD

6123 HEAT SPREADER

SIZE	CAGE CODE	DWG NO	REV
C	67131	47274	2

SCALE 2:1 SHEET 1 OF 1