VICOR CONFIDENTIAL

THIS DOCUMENT AND THE DATA DISCLOSED HEREIN OR HEREWITH IS NOT TO BE REPRODUCED, USED OR DISCLOSED IN WHOLE OR IN PART TO ANYONE WITHOUT THE PERMISSION OF VICOR CORP.

REV.	DESCRIPTION	INTL	DATE	APVD
1	RELEASED PER E180379	US	05/30/18	RLT
2	REVISED PER E200452	CL	08/31/20	RLT
3	REVISED PER E200529	DKT	10/19/20	RLT

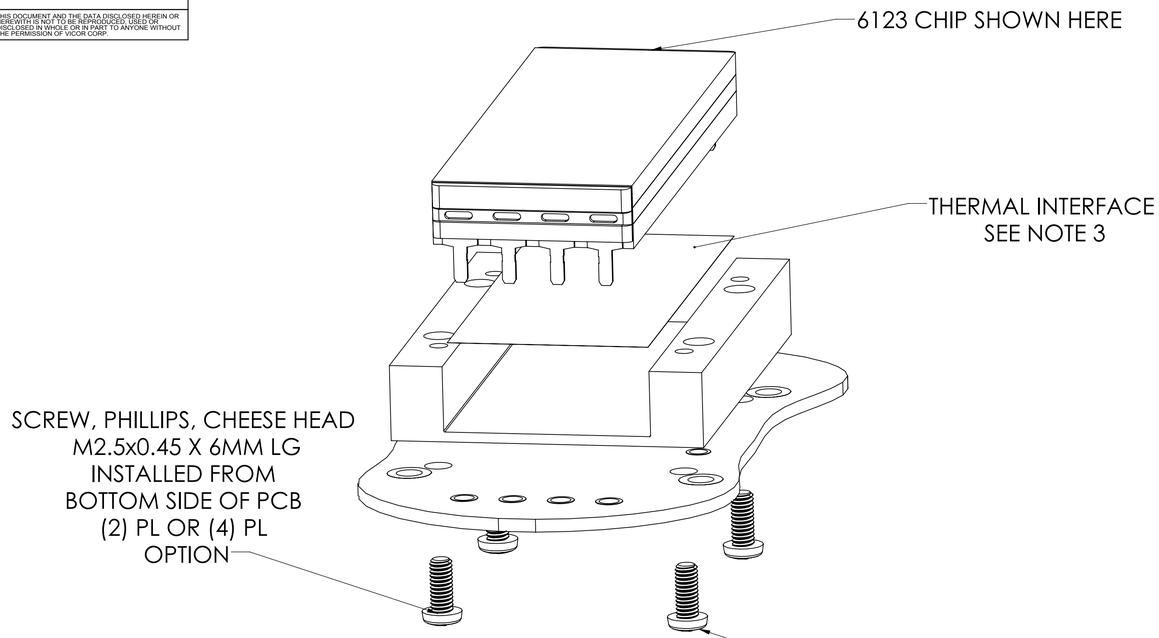

BOTTOM HEAT SPREADER APPLICATION SEE NOTE 3

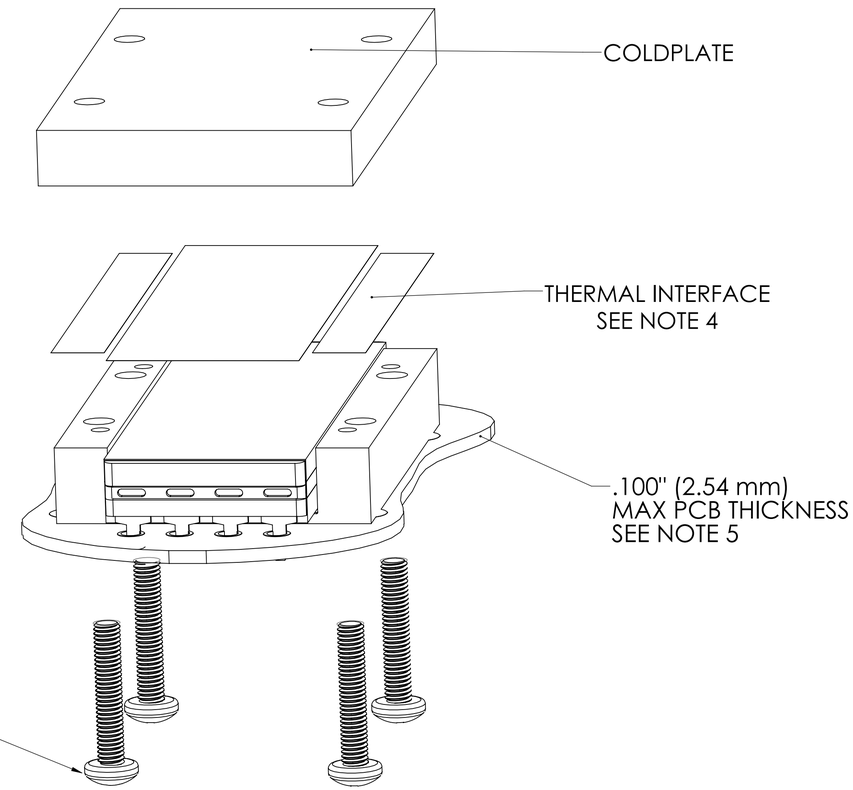

TOP COLDPLATE APPLICATION SEE NOTE 4

NOTES:

1) FOR PCB LAYOUT SEE VICOR APPLICATION DRAWING 47520

2) ROHS COMPLIANT PER CST-0001 LATEST REVISION.

3) PARKER CHOMERICS GEL8010 IS RECOMMENDED AS A THERMAL INTERFACE MATERIAL (TIM).
APPLY A UNIFORM .003" (.076MM) LAYER OF TIM TO THE BOTTOM SURFACE OF THE CHIP,
OR TO THE MATING (INTERNAL) HEATSPREADER SURFACE.
PLACE HEATSPREADER AND CHIP ON PCB.
INSTALL TWO (3623) OR FOUR (4623, 6123) M2.5 SCREWS PHILLIPS, CHEESE HEAD, M2.5x0.45 X 6MM LG.
TORQUE SCREWS TO 6 IN-LBS.
MASK OVER HOLES FOR COLDPLATE SCREWS PRIOR TO WAVE SOLDERING CHIP PINS.

4) APPLY A UNIFORM .003" (.076MM) LAYER OF TIM TO THE TOP SURFACE OF BOTH HEATSPREADER SIDE WALLS.
ADDITIONAL TIM WILL BE REQUIRED TO COMPLETELY FILL THE GAP BETWEEN CHIP AND COLDPLATE.
FOLLOW COLDPLATE VENDOR'S INSTALLATION INSTRUCTIONS, OR ATTACH COLDPLATE WITH TWO (3623) OR FOUR (4623, 6123) SCREWS THROUGH THE PCB AND HEATSPREADER.
M3 X 16MM SCREWS SHOWN FOR ILLUSTRATION ONLY (MCMASTER PN 92000A126)

5.) TO ENSURE ADEQUATE PIN LENGTH THROUGH THE PCB, MAX PCB THICKNESS IS .100" (2.54mm)

6.) IF BOTH SETS OF SCREWS ARE USED SIMULTANEOUSLY, CHOOSE COLD-PLATE MOUNTING SCREWS THAT ARE ALSO M2.5 (16MM LONG) WITH A SMALL DIAMETER HEAD(CHEESE HEAD OR SOCKET HEAD)

DRAWN BY	DATE
David Koffi	03/27/2018

UNLESS OTHERWISE SPECIFIED DIMENSIONS ARE : INCH / [MM]
TOLERANCES ARE:
DECIMALS X.XX [X.X] = ±0.01 [0.25] ANGLES ±1°
X.XXX [X.XX] = ±0.005 [0.127]

THIRD ANGLE PROJECTION

DO NOT SCALE DRAWING

VICOR SWD

APP DWG, HEATSPREADER INSTALLATION, 3623, 4623, 6123

SIZE	CAGE CODE	DWG NO	REV
D	67131	47352	3

SCALE 3:1 SHEET 1 OF 1