VICOR CONFIDENTIAL
THIS DOCUMENT AND THE DATA DISCLOSED HEREIN OR HEREWITH IS NOT TO BE REPRODUCED, USED OR DISCLOSED IN WHOLE OR IN PART TO ANYONE WITHOUT THE PERMISSION OF VICOR CORP.

REV.	DESCRIPTION	INTL	DATE	APVD
1	RELEASE PER E190507A	GCK	10/16/19	VD

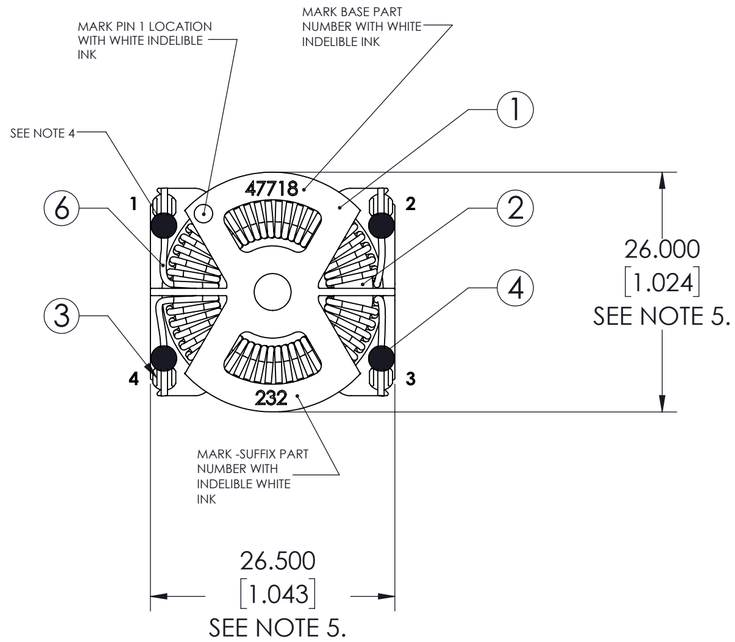

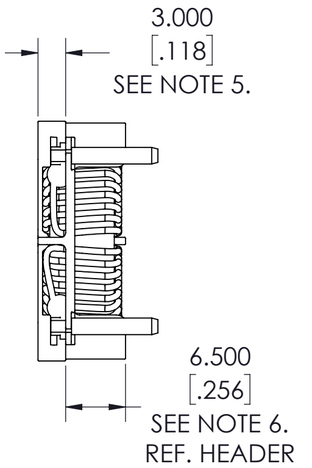

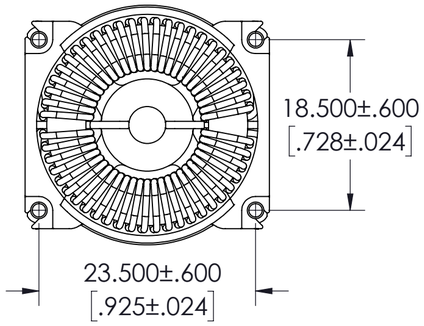

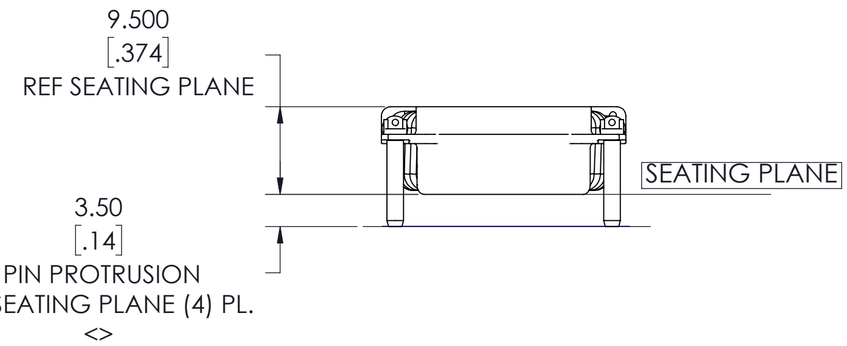

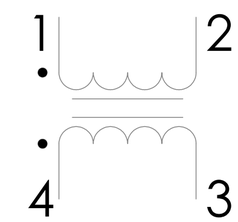

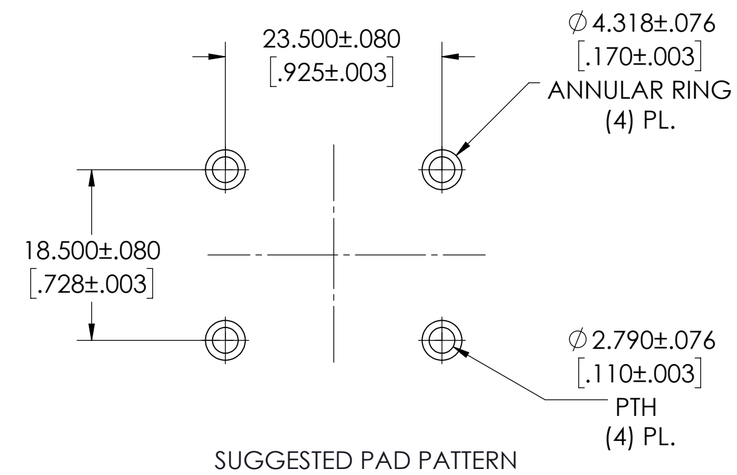

NOTES:
1. <> WIRE: SINGLE BUILD. UL R/C (OBMW2) MW77C CLASS H 180 °C<>
2. <>WINDINGS ARE SINGLE LAYER, NO OVERLAP ALLOWED
3. <>STRIP AND SOLDER WIRES TO TERMINALS USING Sn95/Sb5 SOLDER
4. <>DISPENSE EPOXY (BOM POSITION 4) AND ENSURE WIRES AND PINS (BOM POSITIONS 6,3) ARE BONDED TO HEADER (BOM POSITION 1)
5. <>SOLDER, EPOXY, WIRES SHALL NOT EXTEND BEYOND HEADER
6. <>WINDINGS SHALL NOT EXTEND BEYOND HEADER
7. <> DENOTES A CRITICAL CHARACTERISTIC AND SHALL BE INSPECTED FOR EVERY LOT
8. RoHS COMPLIANT AND LEAD FREE PER CST-0001 LATEST REVISION

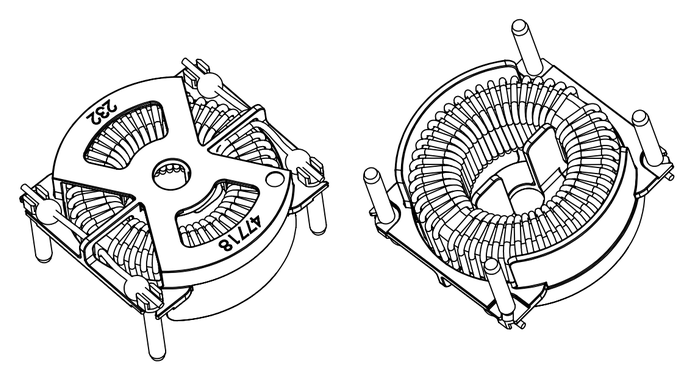

VICOR P/N	INDUCTANCE @ 10 KHz 50 mV	IMPEDANCE @ 1 MHz 50 mV	DCR MAX PER WINDING	RATED CURRENT
47718-232	2.26 mH ±25%	7.0 kΩ MIN	40 mΩ	8.0 A

DRAWN BY	DATE	VICOR SWD
Carlos Yero	03/13/2017	
UNLESS OTHERWISE SPECIFIED DIMENSIONS ARE MM /[INCH] TOLERANCES ARE: DECIMALS X.XX [X.X] = ±0.25 [0.01] X.XXX [X.XX] = ±0.127 [0.005] ANGLES ±1°		INDUCTOR TOROIDAL CM DUAL WINDING TH
THIRD ANGLE PROJECTION DO NOT SCALE DRAWING	SIZE C / CAGE CODE 67131 / DWG NO 47717	REV 1
	SCALE 2:1	SHEET 1 OF 1