VICOR CONFIDENTIAL
THIS DOCUMENT AND THE DATA DISCLOSED HEREIN OR HEREWITH IS NOT TO BE REPRODUCED, USED OR DISCLOSED IN WHOLE OR IN PART TO ANYONE WITHOUT THE PERMISSION OF VICOR CORP.

REV.	DESCRIPTION	INTL	DATE	APVD
1	RELEASED PER E190446	KS	09/03/19	VD
2	REVISED PER E220754a	REW	01/09/23	AH

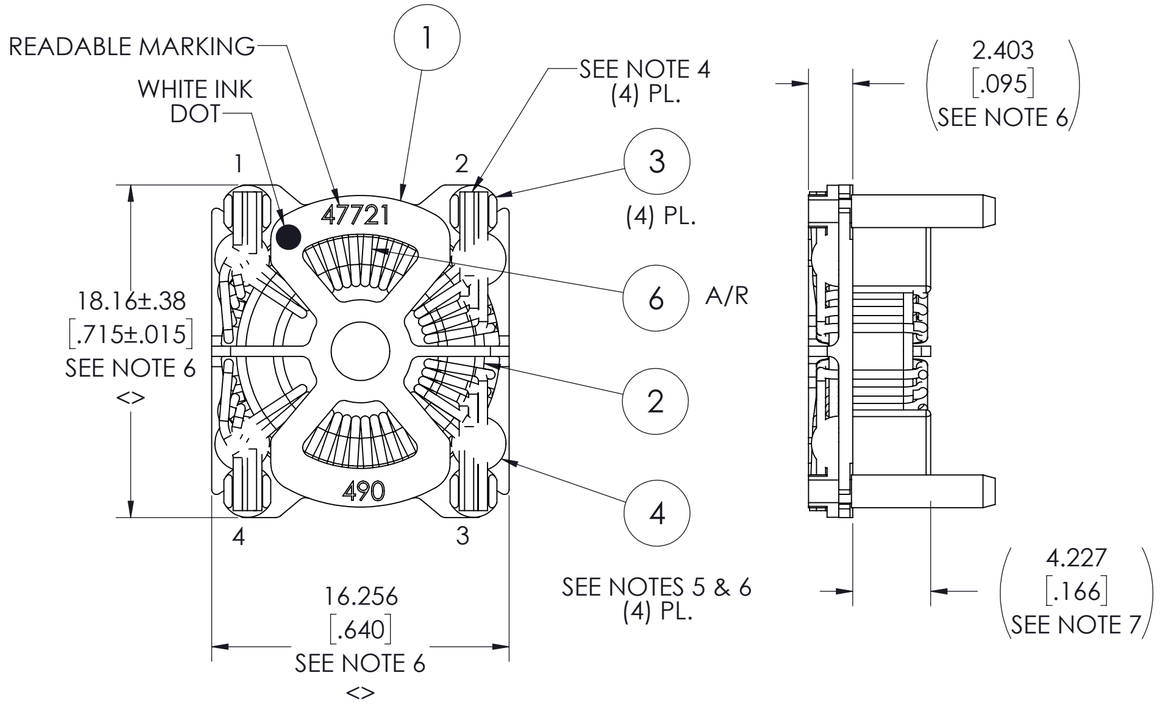

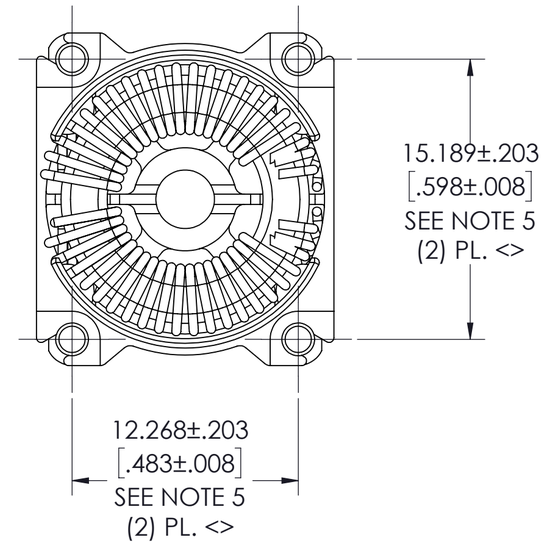

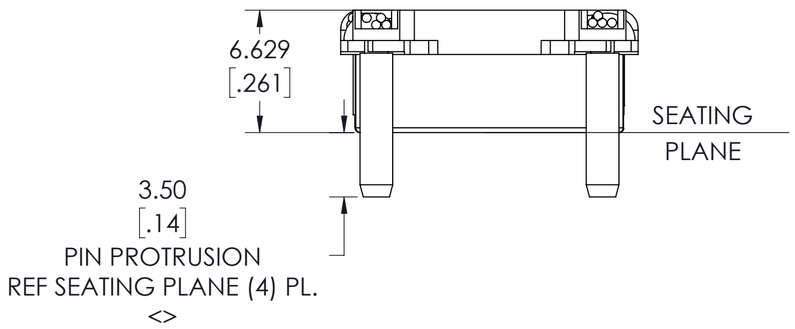

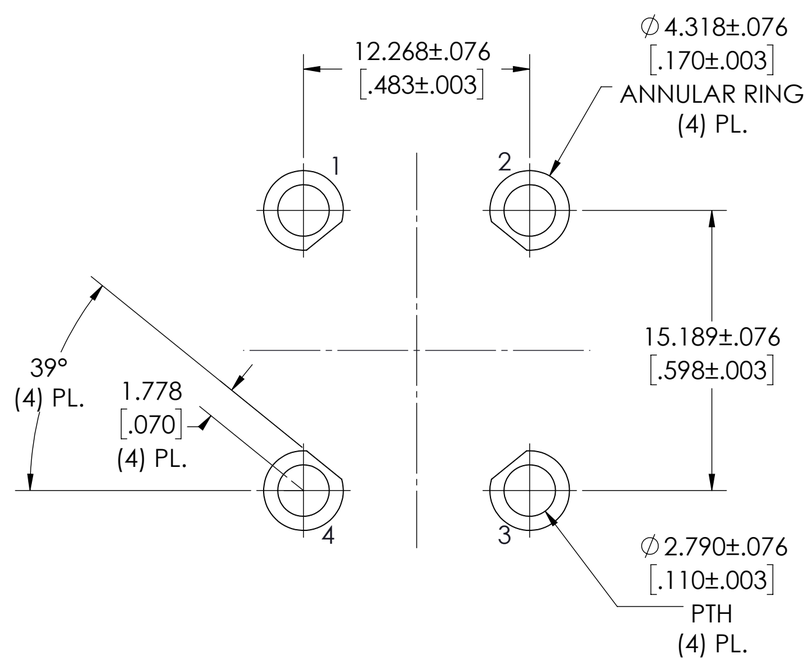

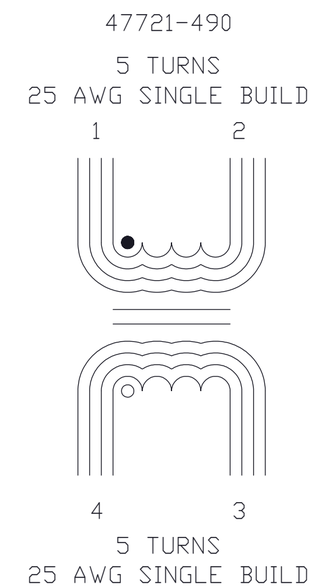

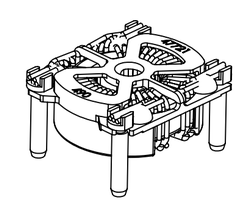

VICOR P/N	IND @ 10KHz 50mV	Z @ 1MHz 50mV	DCR MAX PER WINDING	RATED I
47721-490	49µH ±25%	140 Ω MIN	3.5 mΩ	22.0 A

NOTES:
1- SEE BOM 47721-490 FOR LIST OF PARTS.
<> 2- WIRE TO BE SINGLE BUILD, UL R/C (OBMW2) MW77C, CLASS H, 180° C.
<> 3- WIND SINGLE LAYER. NO BACK TRACKING ALLOWED.
<> 4- STRIP AND SOLDER WIRES TO TERMINAL WITH Sn95/Sb5 SOLDER.
<> 5- DISPENSE EPOXY (ITEM 4) APPROX WHERE SHOWN, ENSURE THE WIRE AND PINS ARE SECURED TO THE HEADER WITH EPOXY. MEASURE PIN POSITION WHERE PIN COMES THROUGH PLASTIC FLANGE, NOT AT PIN TIP.
<> 6- SOLDER, WIRES AND EPOXY SHALL NOT VIOLATE OVERALL DIMENSIONS SHOWN.
<> 7- WINDINGS SHALL NOT VIOLATE DIMENSION SHOWN.
8- <> DENOTES CRITICAL CHARACTERISTIC FOR LOT INSPECTION.
9- RoHS COMPLIANT. LEAD FREE PER CST-0001, LATEST REVISION.

DRAWN BY	DATE
James Bourque	5/28/2017

UNLESS OTHERWISE SPECIFIED DIMENSIONS ARE MM /[INCH]
TOLERANCES ARE:
DECIMALS X.XX [X.XX] = ±0.25 [0.01] ANGLES ±1°
X.XXX [X.XXX] = ±0.127 [0.005]

THIRD ANGLE PROJECTION
DO NOT SCALE DRAWING

VICOR SWD

TH INDUCTOR QUADFILAR COMMON MODE ADAPTER

SIZE	CAGE CODE	DWG NO	REV
C	67131	47720	2

SCALE 4:1 SHEET 1 OF 1