VICOR CONFIDENTIAL

THIS DOCUMENT AND THE DATA DISCLOSED HEREIN OR HEREWITH IS NOT TO BE REPRODUCED, USED OR DISCLOSED IN WHOLE OR IN PART TO ANYONE WITHOUT THE PERMISSION OF VICOR CORP.

REV.	DESCRIPTION	INTL	DATE	APVD
1	RELEASED PER E230459a	WNG	09/22/23	SE
2	REVISED PER E230491	WNG	10/13/23	REW
03	REVISED PER RW031926	REW	03/31/26	REW

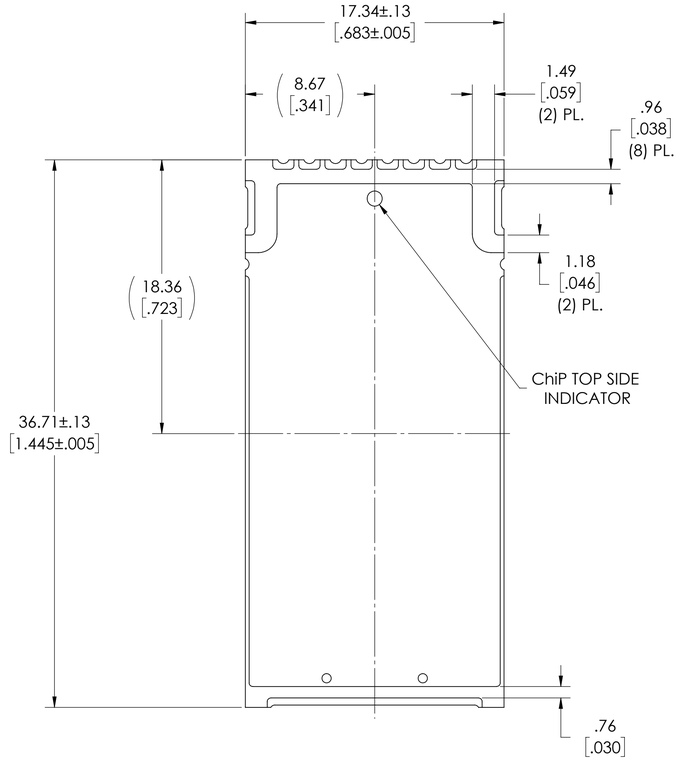

TOP VIEW
(COMPONENT SIDE)

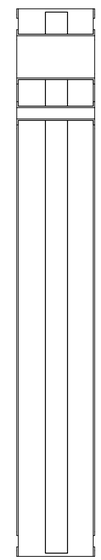

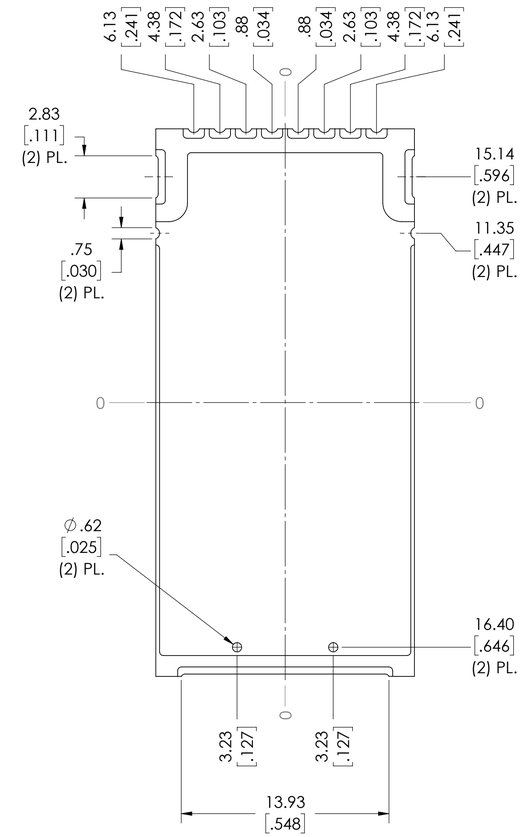

BOTTOM VIEW

3717 DCM TC3

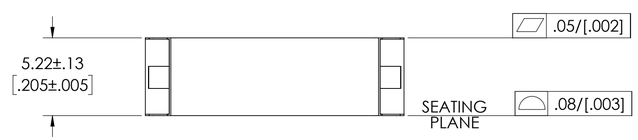

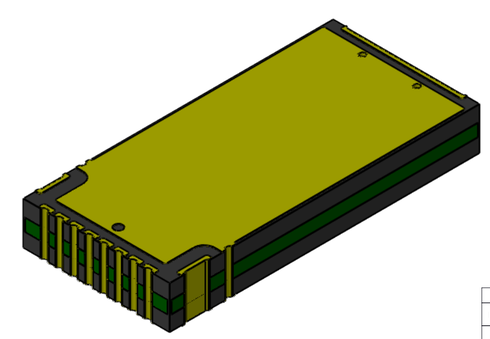

NOTES:
1. RoHS COMPLIANT, LEAD FREE PER CST-0001 LATEST REVISION

DRAWN BY	DATE
Robert Wasik	03/07/2023

UNLESS OTHERWISE SPECIFIED
DIMENSIONS ARE : MM / [INCH]
TOLERANCES ARE:
DECIMALS: X.XX [X.XX] = ±0.25 [0.01] ANGLES ±1°
X.XXX [X.XXX] = ±0.127 [0.005]

THIRD ANGLE PROJECTION

DO NOT SCALE DRAWING

VICOR SWD

PRODUCT OUTLINE SMChiP
DCM3717-TC3

SIZE	CAGE CODE	DWG NO	REV
D	67131	53472	03

SCALE 5:1 SHEET 1 OF 2

VICOR CONFIDENTIAL

THIS DOCUMENT AND THE DATA DISCLOSED HEREIN OR HEREWITH IS NOT TO BE REPRODUCED, USED OR DISCLOSED IN WHOLE OR IN PART TO ANYONE WITHOUT THE PERMISSION OF VICOR CORP.

REVISIONS			
REV	DESCRIPTION	DATE	APPROVED
	SEE SHEET 1		

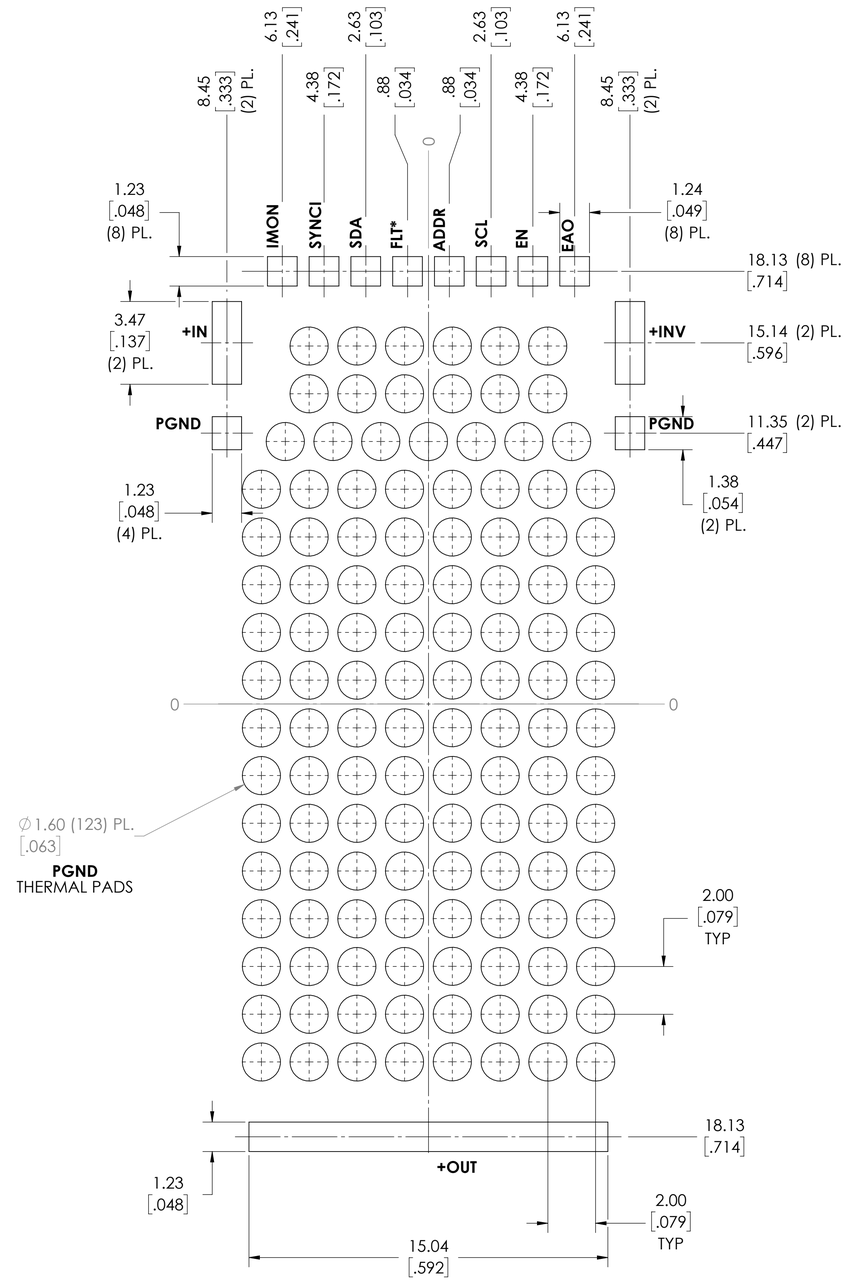

RECOMMENDED LAND PATTERN
3717_DCM_TC3
(COMPONENT SIDE)

DRAWN BY	DATE
Robert Wasik	03/07/2023

UNLESS OTHERWISE SPECIFIED DIMENSIONS ARE : INCH / [MM]
TOLERANCES ARE:
DECIMALS: X.XX [X.XX] = ±0.01 [0.25] ANGLES ±1°
X.XXX [X.XXX] = ±0.005 [0.127]

THIRD ANGLE PROJECTION

DO NOT SCALE DRAWING

VICOR SWD

PRODUCT OUTLINE SMChiP
DCM3717-TC3

SIZE	CAGE CODE	DWG NO	REV
D	67131	53472	03

SCALE 8:1 SHEET 2 OF 2