VICOR CONFIDENTIAL

THIS DOCUMENT AND THE DATA DISCLOSED HEREIN OR HEREWITH IS NOT TO BE REPRODUCED, USED OR DISCLOSED IN WHOLE OR IN PART TO ANYONE WITHOUT THE PERMISSION OF VICOR CORP.

REV.	DESCRIPTION	INTL	DATE	APVD
1	RELEASED PER E240313	MGR	07/19/24	SE
02	REVISED PER RW031126	REW	04/03/26	REW

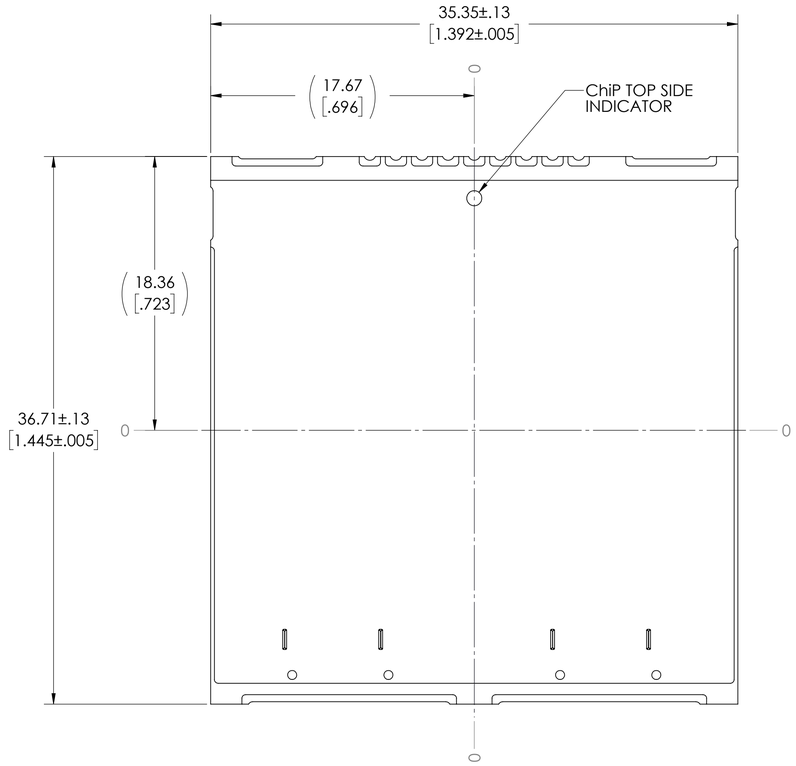

TOP VIEW(COMPONENT SIDE)

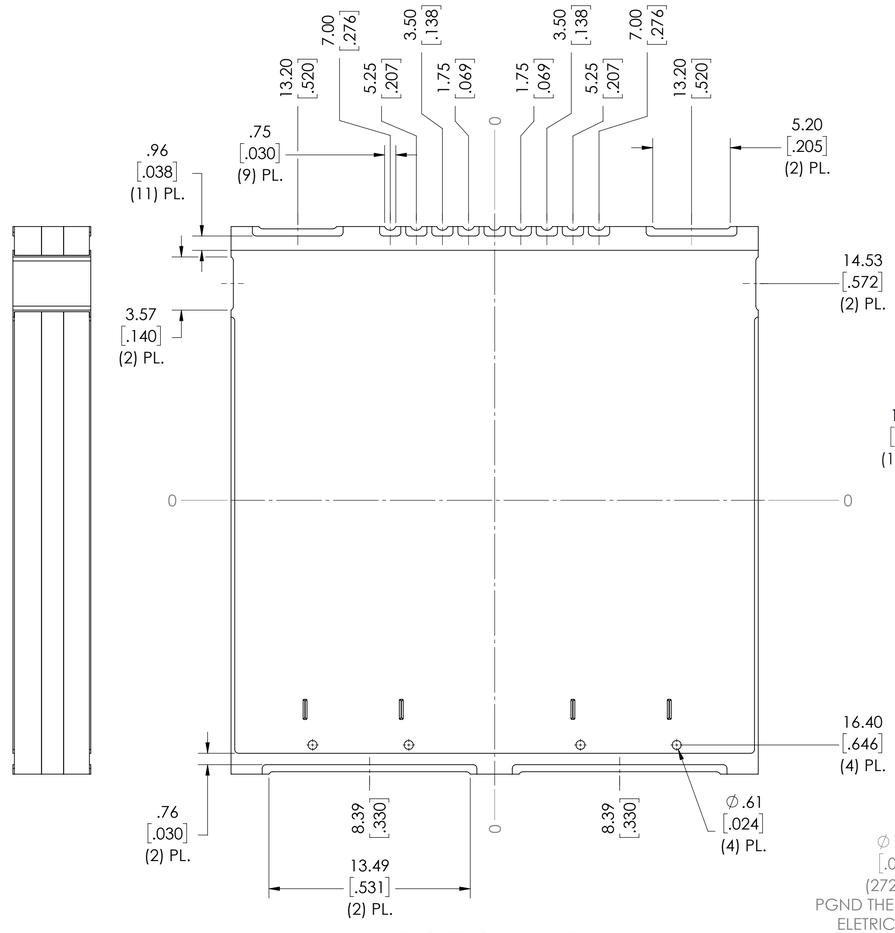

BOTTOM VIEW

3735 DCM TC6

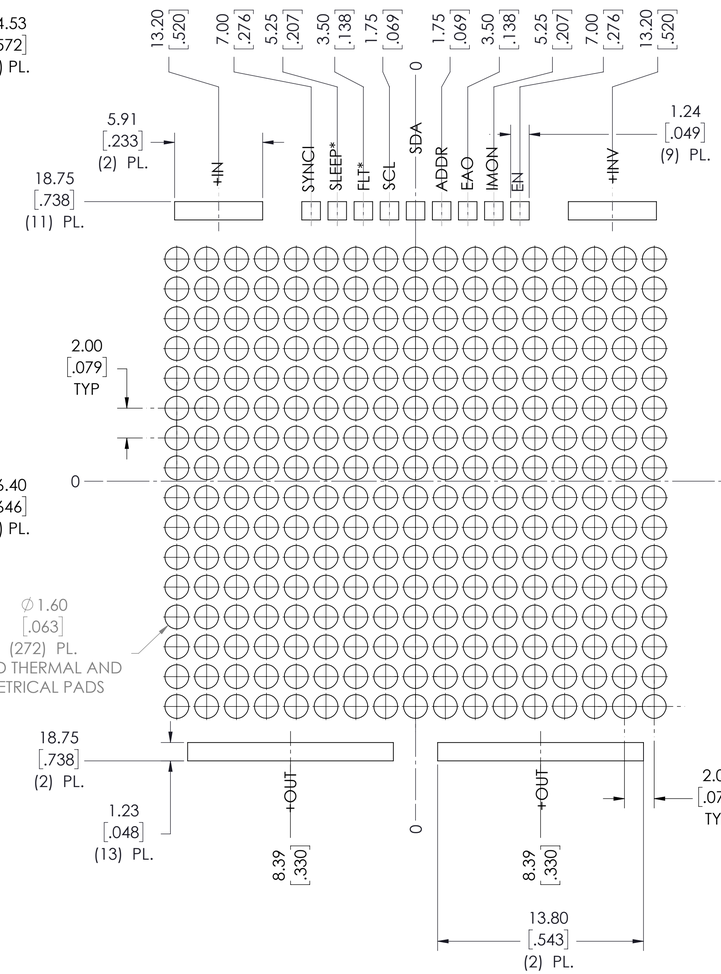

RECOMMENDED LAND PATTERN
3735 DCM TC6
(COMPONENT SIDE)

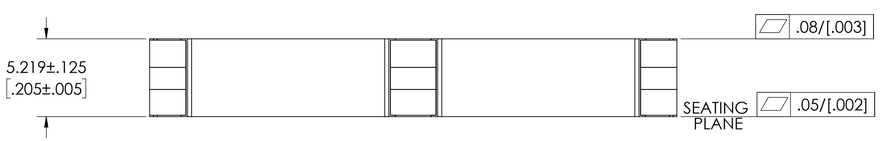

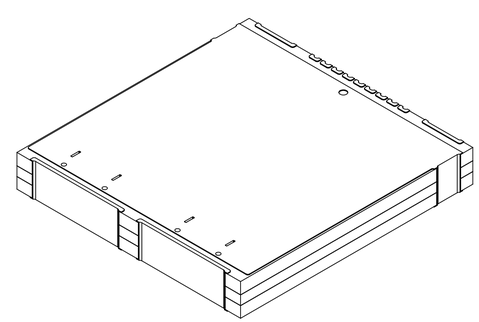

NOTES:
1. RoHS COMPLIANT, LEAD FREE PER CST-0001, LATEST REVISION

DRAWN BY	DATE
Robert Wasik	03/30/2023

UNLESS OTHERWISE SPECIFIED DIMENSIONS ARE : MM / [INCH]
TOLERANCES ARE:
DECIMALS X.XX [X.XX] = ±0.25 [0.01]
X.XXX [X.XXX] = ±0.127 [0.005]
ANGLES ±1°

THIRD ANGLE PROJECTION

DO NOT SCALE DRAWING

VICOR SWD

PRODUCT OUTLINE, SMChiP, 3735 DCM TC6

SIZE	CAGE CODE	DWG NO	REV
D	67131	53555	02

SCALE 5:1 SHEET 1 OF 1